Operating instructions

Metering pump

ProMinent EXtronic® EXBb

EN

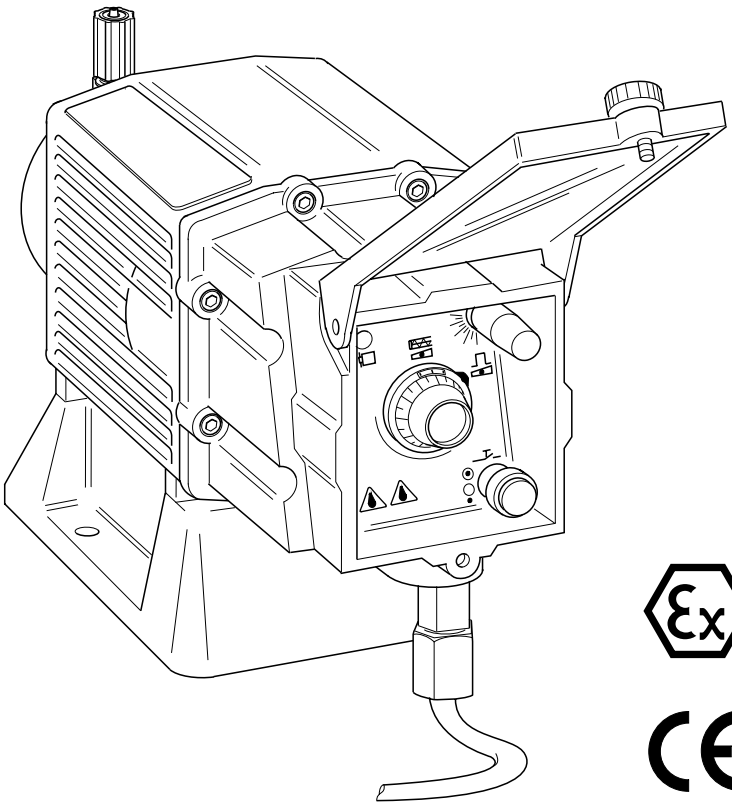

0158

Please carefully read these operating instructions before use. · Do not discard.
The operator shall be liable for any damage caused by installation or operating errors.
The latest version of the operating instructions are available on our homepage.

Part No. 987094 Original operating instructions (2006/42/EC) BA EX 0 16 09/19 EN

Supplementary information

Fig. 1: Please read!

Read the following supplementary information in its entirety! You will benefit more from using the operating instructions should you already know this information.

The following are highlighted separately in the document:

- Enumerated lists

→ Instructions

⇨ Outcome of the instructions

↳ *'State the identity code and serial number' on page 2*: Links to points in this chapter

- refer to ... : References to points in this document or another document

[Keys]

Information

This provides important information relating to the correct operation of the unit or is intended to make your work easier.

Safety Information

Safety information is identified by pictograms - see Safety Chapter.

Validity

These operating instructions conform to current EU regulations applicable at the time of publication.

State the identity code and serial number

Please state identity code and serial number, which you can find on the nameplate when you contact us or order spare parts. This enables us to clearly identify the unit type and material versions.

Table of contents

1 Identity code

Product range ProMinent EXtronic®, Version b							
EXBb	Degree of protection						
	G	Gas explosion protection					
	M	Firedamp and gas explosion protection					
		Pump type	bar	l/h			
				refer to nameplate			
			Dosing head material				
			PP1	PP with bleed valve, O-ring: EPDM			
			PP4	PP without bleed valve/ HV, O-ring: EPDM			
			NP1	Acrylic with bleed valve, O-ring: FPM-A			
			NP3	Acrylic with bleed valve, O-ring: FPM-A			
			NS3	Acrylic self-bleeding, O-ring: FPM-A			
			PS3	PVC self-bleeding, O-ring: FPM-A			
			TT1	PTFE + 25% carbon, flat seal: PTFE			
			SS1	Stainless steel 1.4571 with clamp rings, flat seal: PTFE			
			SS2	Stainless steel 1.4571 with internal thread1/4” NPT, seal: PTFE			
			SB1	Stainless steel 1.4571 with internal thread, Rp 1/4 or 1/2			
			SSM	As SS1, with diaphragm rupture sensor			
			SBM	As SB1, with diaphragm rupture sensor			
				Valve spring			
				0	With valve spring		
				1	With 2 valve springs (1.4571), 0.1 bar		
					Electrical connection		
					A	230 V, 50/60 Hz, open end	
					B	115 V, 50/60 Hz, open end	
					C	200 V, 50/60 Hz, open end	
					D	100 V, 50/60 Hz, open end	
					E	500 V, 50/60 Hz, open end	
						Control type	
						0	Internal stroke rate setting
						1	External contact control
						2	Analogue control 0–20 mA
						3	Analogue control 4–20 mA
						4	External contact control [i,a]
						5	Analogue control 0–20 mA [i,a]
						6	Analogue control 4–20 mA [i,a]
						7	Manual with potential-free ON / OFF

Product range ProMinent EXtronic®, Version b									
						8	Manual with potential-free ON / OFF, [i,a]		
							Control version		
							0	with potentiometer	
							1	with push-button for maximum frequency	
							2	with push-button switch-over for maximum frequency	
								Certification/voltage/language	
								0	BVS Europe / 100–500 V / German
								1	BVS Europe / 100–500 V / English
								2	FM-USA / 115 V / English
								3	CSA Canada / 115 V, 230 V / English

2 Safety chapter

Identification of safety notes

The following signal words are used in these operating instructions to denote different severities of danger:

Signal word	Meaning
WARNING	Denotes a possibly dangerous situation. If this is disregarded, you are in a life-threatening situation and this can result in serious injuries.
CAUTION	Denotes a possibly dangerous situation. If this is disregarded, it could result in slight or minor injuries or material damage.

Warning signs denoting different types of danger

The following warning signs are used in these operating instructions to denote different types of danger:

Warning signs	Type of danger
	Warning – high-voltage.
	Warning – danger zone.

Intended use

- Only use the pump to meter liquid feed chemicals.
- In potentially explosive premises, the pump may only be operated with the appropriate nameplate (and the respective Declaration of Conformity) for pumps for use in areas at risk of explosion in compliance with Directive 2014/34/EU in accordance with the European guidelines. The explosion group, category and degree of protection specified on the label must correspond to or be better than the conditions in the intended application.
- The pump may only be used after it has been correctly installed and started up in accordance with the technical data and specifications contained in the operating instructions.
- Observe the general limitations with regard to viscosity limits, chemical resistance and density - see also ProMinent® Resistance List in the Product Catalogue or at *www.prominent.com* !
- All other uses or modifications are prohibited.
- Never operate pumps in premises at risk of explosion without the relevant nameplate (and the respective EU Declaration of Conformity) for pumps for premises at risk of explosion.
- The pump is not intended for the metering of gaseous media and solids.
- The pump is not intended for the metering of flammable media without implementing suitable protective measures. Only the “SB” design is approved for this.
- The pump is not designed to meter explosive media or mixtures.

- The pump is not intended for exterior applications without the implementation of suitable protective measures.
- The pump should only be operated by trained and authorised personnel - see the following "Qualifications" table.
- You have a responsibility to adhere to the information contained in the operating instructions at the different phases of the unit's service life.

Qualification of personnel

Task	Qualification
Storage, transport, unpacking	Instructed person
Assembly	Technical personnel, service
Planning the hydraulic installation	Technical personnel who have a thorough knowledge of diaphragm pumps
Hydraulic installation	Technical personnel, service
Electrical installation	Electrical technician with knowledge of explosion protection
Operation	Instructed person
Maintenance, repair	Technical personnel, service
Decommissioning, disposal	Technical personnel, service
Troubleshooting	Technical personnel, electrical technician with knowledge of explosion protection, instructed person, service

Explanation of the table:

Technical personnel

Technical personnel are deemed to be people who are able to assess the tasks assigned to them and recognise possible dangers based on their technical training, knowledge and experience, as well as knowledge of pertinent regulations.

Note:

A qualification of equal validity to a technical qualification can also be gained by several years of employment in the relevant field of work.

Electrical technician with knowledge of explosion protection

An electrical technician with an additional explosion protection qualification should be specifically trained for the field of work in which he is employed and be familiar with the relevant standards and regulations.

An electrical technician with an additional explosion protection qualification can work on electrical systems and independently recognise and avoid possible dangers based on his technical training and experience.

The electrical technician with an additional explosion protection qualification is familiar with all the standards and regulations applicable to explosion protection, in particular, but not however exclusively, with all parts of EN 60079 [Electrical equipment for areas at risk of a gas explosion].

An electrical technician with an additional explosion protection qualification must comply with the provisions of the applicable statutory directives on accident prevention.

Instructed person

An instructed person is deemed to be a person who has been instructed and, if required, trained in the tasks assigned to him/her and possible dangers that could result from improper behaviour, as well as having been instructed in the required protective equipment and protective measures.

Service

The Service department refers to service technicians, who have received proven training and have been authorised by ProMinent to work on the system.

Safety information

WARNING!

Warning of personal injury and material damage

- The pump may start to pump as soon as it is connected to mains voltage.
- Mains voltage may be present inside the pump housing.
- Should a dangerous or unknown feed chemical be used: It may escape from the hydraulic components when working on the pump.
- When pumping flammable media the operator must take suitable safety precautions.

WARNING!

Danger from hazardous substances!

Possible consequence: Fatal or very serious injuries.

Please ensure when handling hazardous substances that you have read the latest safety data sheets provided by the manufacture of the hazardous substance. The actions required are described in the safety data sheet. Check the safety data sheet regularly and replace, if necessary, as the hazard potential of a substance can be re-evaluated at any time based on new findings.

The system operator is responsible for ensuring that these safety data sheets are available and that they are kept up to date, as well as for producing an associated hazard assessment for the workstations affected.

CAUTION!

Warning of personal injury and material damage

- Feed chemical may spray out of the hydraulic components if they are tampered with or opened due to pressure in the liquid end and adjacent parts of the system.
- The metering pump may generate a multiple of its rated pressure. Hydraulic parts may rupture if a discharge line is blocked.
- An unsuitable feed chemical may damage the parts of the pump that come into contact with it.
- The use of untested third party components may result in injury to personnel and material damage.
- Danger may result from a poorly accessible pump due to incorrect operation and poor maintenance.
- The metering behaviour of the pump changes if a different liquid end size is fitted.

Isolating protective equipment

Only ProMinent Service may open the housing.

Other safety equipment

Adhesive labels

WARNING!

- The following safety information must be affixed to pumps that contain parts made of electrically non-conducting plastic.
- Ensure that the label is always fitted and legible.
- The label should indicate that:
  - plastic parts may only be wiped down carefully with a damp cloth.
  - the discharge line and suction line must always be earthed before working on the pump.

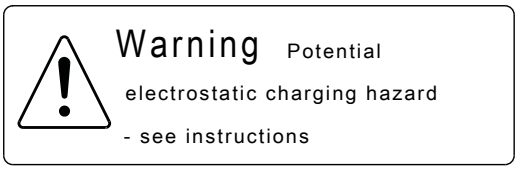

Fig. 2

WARNING!

- The following safety information for ProMinent Service needs to be adhered to the pump foot.
- Ensure that the label is always fitted and legible.

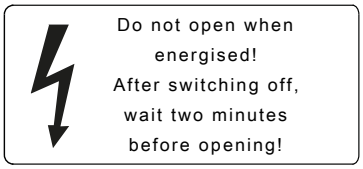

Fig. 3

Information in the event of an emergency

In an emergency, either press the mains switch (optional) or press the emergency-off switch installed by the customer or disconnect the pump from the mains in line with the emergency-shut-down guidelines for your system.

If feed chemical escapes, also ensure that the pump's hydraulic environment is at atmospheric pressure. Adhere to the material safety data sheet for the feed chemical.

Sound pressure level

Sound pressure level LpA < 70 dB according to EN ISO 20361

at maximum stroke length, maximum stroke rate, maximum back pressure (water)

3 Storage, transport and unpacking

Safety information

WARNING!

Only return metering pumps for repair in a cleaned state and with a flushed liquid end - refer to "Decommissioning!

Only return metering pumps with a completed Decontamination Declaration form. The Decontamination Declaration constitutes an integral part of an inspection / repair order. A unit can only be inspected or repaired when a Declaration of Decontamination Form is submitted that has been completed correctly and in full by an authorised and qualified person on behalf of the pump operator.

The "Decontamination Declaration Form" can be found on our homepage.

CAUTION!

Danger of material damage

The device can be damaged by incorrect or improper storage or transportation!

- The unit should only be stored or transported in a well packaged state - preferably in its original packaging.
- The packaged unit should also only be stored or transported in accordance with the stipulated storage conditions.
- The packaged unit should be protected from moisture and the ingress of chemicals.

Scope of delivery

Compare the delivery note with the scope of supply.

Ambient conditions

- refer to "Technical Data" chapter.

4 Overview of equipment

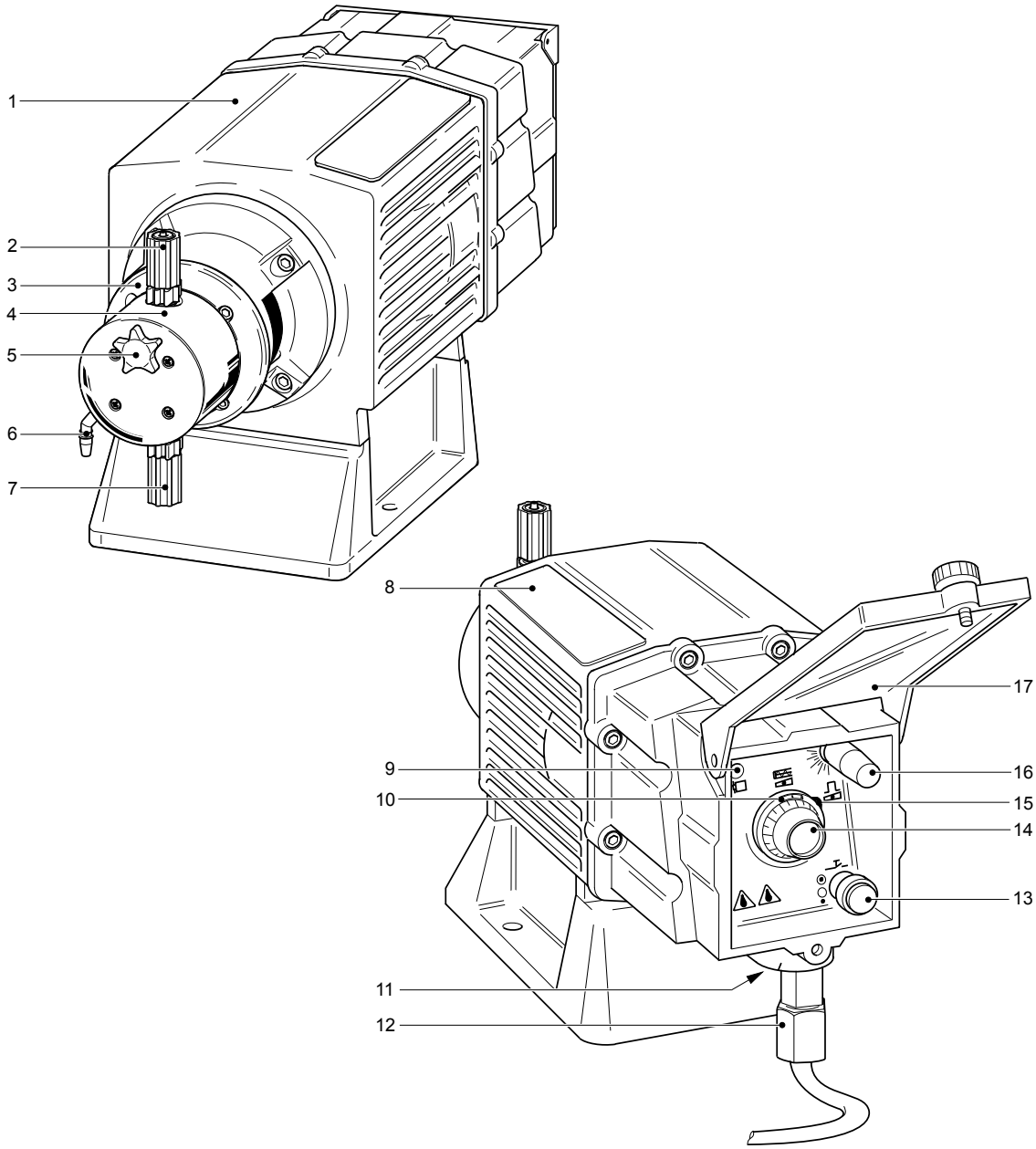

1 - Drive unit with controller
2 - Pressure connector
3 - Backplate
4 - Liquid end
5 - Bleed valve (only for the 1000 - 0417 NP and PP types)
6 - Bypass hose sleeve (only for the 1000 - 0417 NP and PP types)
7 - Suction connector
8 - Nameplate
9 - Operating display
10 - Inspection window stroke length control knob
11 - External connection
12 - Mains connection
13 - Mains switch (not for 500 V version)
14 - Stroke length control knob
15 - Locking lever
16 - Control knob for stroke rate or pushbutton/pushbutton switch for priming
17 - Transparent cover

5 Functional description

5.1 Drive Unit

The diaphragm is driven by an electromagnet, which is controlled by an electronic controller.

5.2 Liquid End

The dosing process is performed as follows: The diaphragm is pressed into the dosing head; the pressure in the dosing head closes the suction valve and the feed chemical flows through the discharge valve out of the dosing head. The diaphragm is now drawn out of the dosing head; the discharge valve closes due to the negative pressure in the dosing head and fresh feed chemical flows through the suction valve into the dosing head. One cycle is completed.

5.3 Self-Bleeding

Self-bleeding liquid ends (SEK types) are capable of independent priming when a discharge line is connected and diverting existent air pockets via a bypass. During operation they are also capable of conveying away gases which are produced, independently of the operating pressure in the system. It is also possible to dose precisely in a depressurised state due to the integral back pressure valve.

5.4 Diaphragm rupture sensor (optional)

The diaphragm rupture warning system monitors the leak-tightness of the metering diaphragm. The associated liquid end also has a separating diaphragm, which prevents the feed chemical from escaping for some time.

The diaphragm rupture warning system is equipped with an inherently safe diaphragm rupture sensor.

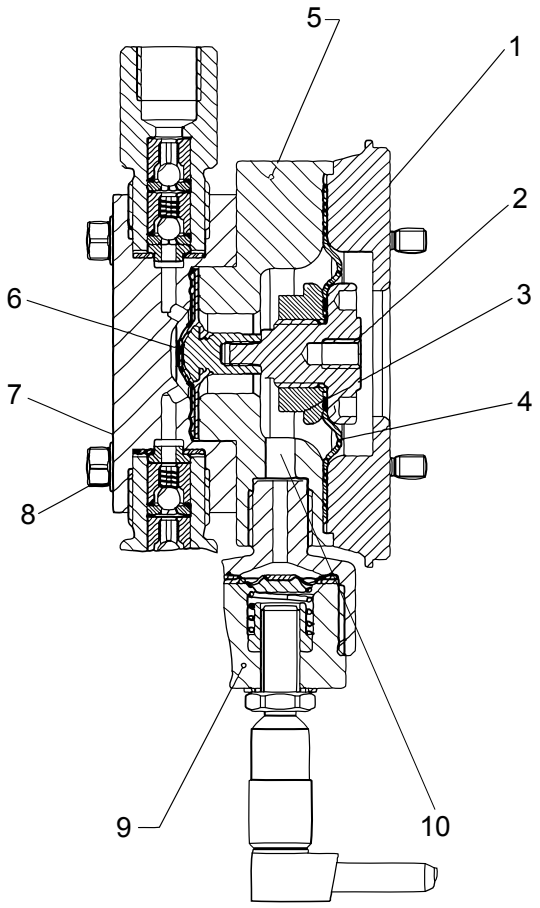

Fig. 4

1 Backplate
2 Adapter
3 Intermediate bushing
4 Additional diaphragms
5 Adapter plate
6 Metering diaphragm
7 Dosing head
8 Fixing bolt
9 Diaphragm rupture sensor
10 Feed channel

CAUTION!
Only above approximately 2 bar system back pressure is an electrical signal triggered in the event of diaphragm rupture.

CAUTION!
Once the operating membrane has ruptured, a precise metering rate can no longer be guaranteed.

5.5 Metering rate

The stroke length can be continuously adjusted between 100 % and 10 % using the stroke length control knob (14).

The stroke rate control knob (16) can be used to manually set 0 to 110 (120) strokes/min.

5.6 Control types

”Internal stroke rate setting”

(Identity code characteristic "Control type": 0)

The controlling pulse is internally generated and adjusted using the stroke rate control knob (16).

“External contact control”

(Identity code characteristic "Control type": 1, 4):

The controlling pulse is externally generated from potential-free or semiconductor contacts and fed to the drive unit via the "external control" jack. Examples are contact water meter or controls.

"Analogue control x - 20 mA"

(Identity code characteristic "Control type": 2, 3, 5, 6):

An external, analogue signal is fed to the drive unit via the "External control” jack, the stroke rate changes proportionally according to the 0 .. 20 mA or 4 .. 20 mA signal.

“Internal stroke rate setting with pause function”

(Identity code characteristic "Control type": 7, 8):

As for "Internal stroke rate setting” version, however there is also the possibility of switching the metering on and off via an external semiconductor contact or potential-free contact.

All control types, that can be controlled via an input, can be supplied with an "External control" input of a "non-intrinsically safe" [i, a] or "intrinsically safe" type.

5.7 Button for maximum stroke rate

Push-button for max. frequency

(Identity code characteristic "Control variant": 1):

A push-button is available as an option to allow the pump to run at maximum stroke rate.

Key switch for max. frequency

(Identity code characteristic "Control variant": 2):

A key switch is available as an option to allow the pump to run at maximum stroke rate.

6 Assembly

– *Compare the dimensions on the dimension sheet with those of the pump.*

WARNING!

Danger of electric shock

If water or other electrically conducting liquids penetrate into the drive housing, in any other manner than via the pump's suction connection, an electric shock may occur.

– Position the pump so that it cannot be flooded.

CAUTION!

Danger from incorrectly operated or inadequately maintained pumps

Danger can arise from a poorly accessible pump due to incorrect operation and poor maintenance.

– Ensure that the pump is accessible at all times.
– Adhere to the maintenance intervals.

Capacity too low

The liquid end valves can be disturbed by vibrations.

– *Secure the metering pump so that no vibrations can occur.*

Capacity too low

If the valves of the liquid end are not vertical, they cannot close correctly.

– *Suction and discharge valves must stand vertically upwards (for self-bleeding liquid end, the bleed valve).*

→ Mount the metering pump with the pump foot on a horizontal, level and load-bearing supporting surface.

7 Installation, hydraulic

WARNING!

EX pumps in areas at risk of explosion

- Metering pumps in areas at risk of explosion are provided, as a matter of course, with an appropriate safety relief valve on the outlet side of the metering pump (which is used to protect against excessive heating due to overloading and impact sparks caused by the breakage of power end parts triggered by overloading.)
- Should the various components have differing temperature classes, scope for using the complete pump depends on the component with the lowest temperature class.
- The version with an Ex”i” version of diaphragm rupture sensor should always be used.
- Ensure that installations in areas at risk of explosion are checked by a "recognised competent" person.
- Please note the relevant national regulations during installation!

WARNING!

Risk of fire with flammable feed chemicals

- Flammable media may only be transported using stainless steel dosing heads. In exceptional cases where this is not possible, PTFE with carbon can be used, whereby our TT_ versions are manufactured from this conducting plastic. Here, the operator is urged to take special care due to the low mechanical strength.
- The metering pumps may meter flammable media, but only in principle versions with the “intrinsically safe [i,a]" version of the diaphragm rupture sensor.
- The following applies to all metering pumps for metering flammable media:

  During filling and draining of the liquid end, an expert must ensure that feed chemical does not come into contact with air.

WARNING!

Warning of feed chemical reactions to water

Feed chemicals that should not come into contact with water may react to residual water in the liquid end that may originate from works testing.

- Blow the liquid end dry with compressed air through the suction connector.
- Then flush the liquid end with a suitable medium through the suction connector.

WARNING!

The following measures are beneficial when working with highly aggressive or hazardous feed chemicals:

- Install a bleed valve with recirculation in the storage tank.
- Install a shut-off valve on the discharge or suction side.

CAUTION!

Warning of feed chemical spraying around

PTFE seals, which have already been used / compressed, can no longer reliably seal a hydraulic connection.

- New, unused PTFE seals must always be used.

CAUTION!

Suction problems are possible

The valves may no longer close properly with feed chemicals with a particle size of greater than 0.3 mm.

- Install a suitable filter in the suction line.

CAUTION!

Warning of the discharge line rupturing

With a closed discharge line (e.g. from a clogged discharge line or by closing a valve), the pressure that the metering pump generates may reach several times more than the permissible pressure of the system or the metering pump. This could lead to lines rupturing resulting in dangerous consequences with aggressive or hazardous feed chemicals.

- Install a relief valve that limits the pressure of the pump to the maximum permissible operating pressure of the system.

CAUTION!

Uncontrolled flow of feed chemical

Feed chemical may press through a stopped metering pump if there is back pressure.

- Use an injection valve or a vacuum breaker.

CAUTION!

Uncontrolled flow of feed chemical

Feed chemical may press through the metering pump in an uncontrolled manner in the event of excessive priming pressure on the suction side of the metering pump.

– Do not exceed the maximum permissible priming pressure for the metering pump or
– set up the installation properly.

CAUTION!

Warning of backflow

Liquid ends, foot valves, back pressure valves, relief valves or spring-loaded injection valves do not constitute absolutely leak-tight sealing elements.

– Use a shut-off valve, a solenoid valve or a vacuum breaker for this purpose.

Diaphragm rupture sensor

CAUTION!

Danger resulting from unnoticed diaphragm rupture

If the pump has been ordered with an electric diaphragm rupture sensor, it still has to be installed.

– Screw the enclosed diaphragm rupture sensor into the liquid end.

CAUTION!

Warning of unnoticed diaphragm rupture

Only above approximately 2 bar system back pressure is a signal generated in the event of the rupture of a diaphragm.

– Only rely on the diaphragm rupture sensor with back pressures of greater than 2 bar.
  Or install a back pressure valve and set it to a minimum of 2 bar – if the installation permits this.

7.1 Standard installation

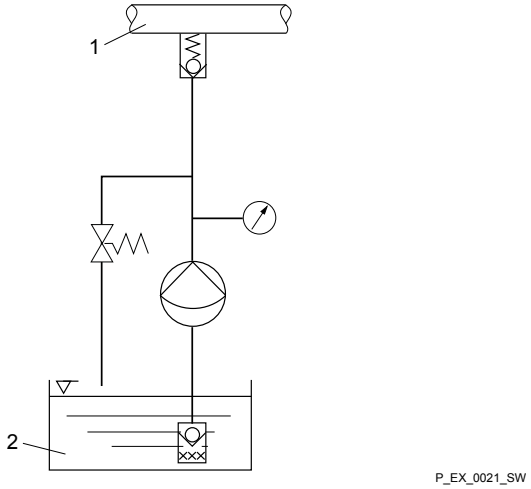

Fig. 5: Standard installation

1 Main line
2 Storage tank

Key for all hydraulic diagrams

Symbol	Explanation	Symbol	Explanation
	Metering pump		Foot valve with filter mesh
	Injection valve		Filter insert
	Adjustable back pressure valve (also used as a relief valve)		Interim tank with float valve
	Multifunctional valve		Level switch
	Shut-off valve		Manometer
	Solenoid valve		Filling device
	Ball retaining valve		Siphon device

7.2 Information on the suction-side installation

Bends

- Always use bends to curve lines - never angles.

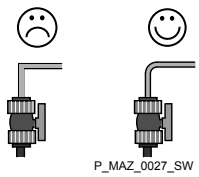

Fig. 6

Length of suction line

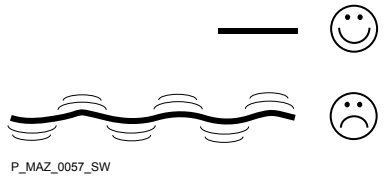

Fig. 7

- Keep the suction line as short as possible.

Height difference, suction side

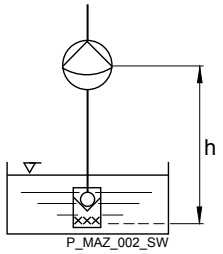

Fig. 8

- The height h (see diagram) may only be smaller than or equal to the suction lift of the pump P divided by the density rho of the feed chemical:

  `h (in m)≤P (in mWS) / rho (in g/cm³)`
- The height h - see diagram - and the cross-section of the suction line must be dimensioned in such a way that the negative pressure created during the suction process cannot reach the vapour pressure of the feed chemical being metered (cavitation!).

  This can be seen in extreme cases by the dropping of the fluid level or by an incomplete reciprocal stroke.

Avoid allowing the suction line to run dry.

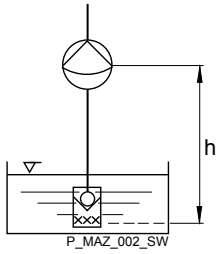

Fig. 9

- Install a foot valve at the end of the suction line, in case the pump is higher than the maximum fluid level in the storage tank.
- Only shorten the free end of the suction line until the foot valve is suspended just above the container base.

7.3 Information on the discharge-side installation

With return from the main line

- Install a vacuum breaker if the feed chemical may not press through the metering pump. Metering pumps are not absolutely leak-tight shut-off units.
- Install the injection valve at the injection point to prevent unwanted mixing of water and feed chemical in the discharge line.

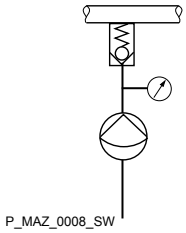

Fig. 10

Avoid exceeding maximum permissible operating pressure

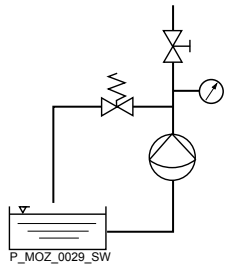

Fig. 11

- A relief valve with a return into the storage tank is useful as overload protection for the discharge line, for example install a ProMinent® multifunctional valve.
- Use a pulsation damper to dampen pressure peaks with a metering stroke with long discharge lines or increase the pipe cross-section.

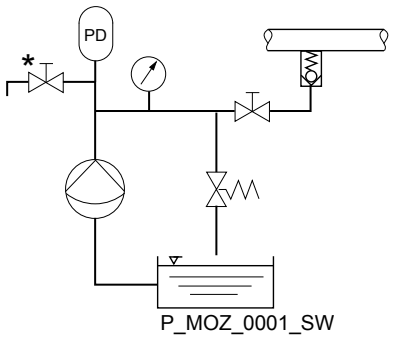

Fig. 12

* Ventilation line with pressure vessels
PD Pulsation damper

7.4 How not to install

Fault description	Cause	Remedy
The suction line cannot be bled.	A pocket of air (arrow) is in the suction line.	Prevent the air pocket or install as shown in ↳ *'Avoid exceeding maximum permissible operating pressure' on page 24*.

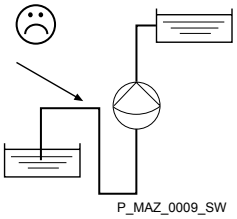

Fig. 13

Fault description	Cause	Remedy
Feed chemical flows uncontrolled when the line is filled.	Siphon effect by discharge line falling too deeply.	Interrupt the discharge line, as in ↳ *'With high suction-side pressure 2' on page 25*

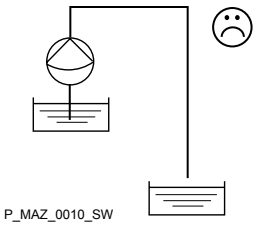

Fig. 14

Fault description	Cause	Remedy
feed chemical presses through the liquid end.	The suction-side priming pressure is too high due to the negative pressure difference between the discharge and suction side.	Install as shown in *'With high suction-side pressure 3' on page 26* or *'With high suction-side pressure 2' on page 25*.

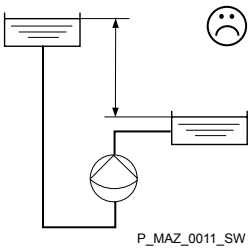

Fig. 15

Fault description	Cause	Remedy
The suction line may tear off.	The overflow line is routed back into the suction line, which may be secured or blocked with a foot valve.	Install as in *'Avoid exceeding maximum permissible operating pressure' on page 24*.
The metering pump meters the feed chemical in a cycle.	The overflow line is routed back into the suction line, whereby it is possible that the multi-functional valve no longer closes after being opened.	Install as in *'Avoid exceeding maximum permissible operating pressure' on page 24*.

Fig. 16

7.5 Special installation instructions

With high suction-side pressure 1

- Position the end of the discharge line higher than the fluid level in the storage tank to avoid overstraining.

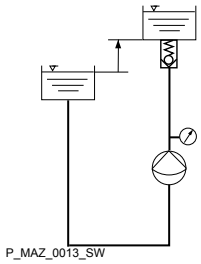

Fig. 17

With high suction-side pressure 2

- Position the outlet of the discharge line higher than the fluid level in the storage tank.

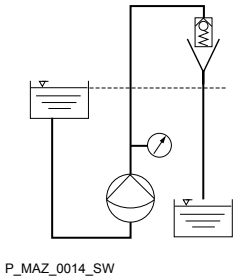

Fig. 18

With high suction-side pressure 3

- Install an adjustable back pressure valve in the discharge line and install a shut-off valve in the suction line, which has to be closed when the pump is at a standstill (preferably a solenoid valve).

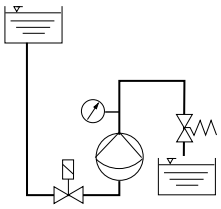

P_MAZ_0015_SW

Fig. 19

With fluctuating suction-side pressure 1

- If the system is primed from lines with fluctuating pressure, use an interim tank with a float valve to ensure a regular delivery flow.

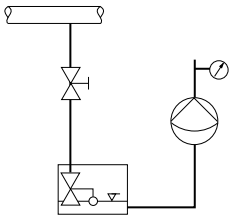

P_MAZ_0016_SW

Fig. 20

With fluctuating suction-side pressure 2

- If the system is primed from a high feed level with fluctuating pressure, use an interim tank with a float valve to ensure a regular delivery flow.

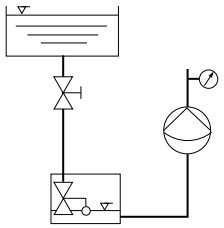

P_MAZ_0010_SW

Fig. 21

With negative pressure in the main line

- When metering into a main line, in which there is negative pressure, install a multifunctional valve, a back pressure valve (DHV-RM) or an injection valve in the discharge line to ensure that the feed chemical is not sucked through.

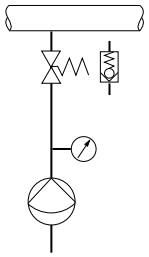

P_MAZ_0010_SW

Fig. 22

8 Installation, electrical

WARNING!

EX pump in areas at risk of explosion

- When installing the metering pump, observe the installation instructions for devices in areas at risk from explosion.
- Note the enclosed documentation for the individual electrical components.

WARNING!

Danger of electric shock

Unprofessional installation may lead to electric shocks.

- Crimp cable end sleeves onto all shortened cable cores.
- Only technically trained personnel are authorised to undertake the electrical installation of the device.

WARNING!

Danger of electric shock

In the event of an electrical accident, it must be possible to quickly disconnect the pump, and any electrical ancillaries which may possibly be present, from the mains.

- Install an emergency cut-off switch in the mains supply line to the pump and any electrical ancillaries which may be present or
- Integrate the pump and electrical ancillaries which may be present in the emergency cut-off management of the system and inform personnel of the isolating option.

WARNING!

Danger of electric shock

This pump is equipped with a protective earth conductor, to reduce the risk arising from an electric shock.

- Connect the PE conductor to "earth" with a clean and permanent electrical connection.

WARNING!

Danger of electric shock

A mains voltage may exist inside the housing or electrical ancillaries.

- Immediately disconnect the pump from the mains/power supply if the housing has been damaged. Only return the pump to service after an authorised repair.

Mains connection

WARNING!
The safety fuse used internally has a switching capacity of 1500 A. If the short-circuit current in the supply network may be greater than 1500 A, the pump should be fused with an appropriate pre-fuse with a higher switching capacity (rated current of less than 1500 A).

Use an electrical isolating device in the mains supply cable, such as a mains switch, to de-energise the pump independently of the entire installation (e.g. for repairs).

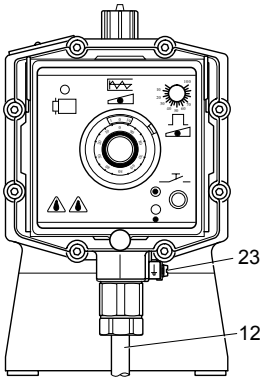

12 Mains connection
23 Connection terminal for potential equalisation

Tab. 1: EXBbG

L1:	Phase	Brown
N:	Neutral	blue
PE:	Protective earth conductor	Yellow / green

Tab. 2: EXBbM

L1:	Phase	Brown
N:	Neutral	grey
-:	free	Black *
PE:	Protective earth conductor	Yellow / green **

* internal - isolated, external - connect to a free terminal.

** twist the three individually concentric protective earth conductors together, cover with yellow/green hose and connect to the protective earth conductor terminal.

Induced voltages

If the pump is connected to the mains in parallel with inductive consumers (e.g. solenoid valve, motor), it must be electrically disconnected from these consumers in order to prevent damage due to induced voltages when shutting down.

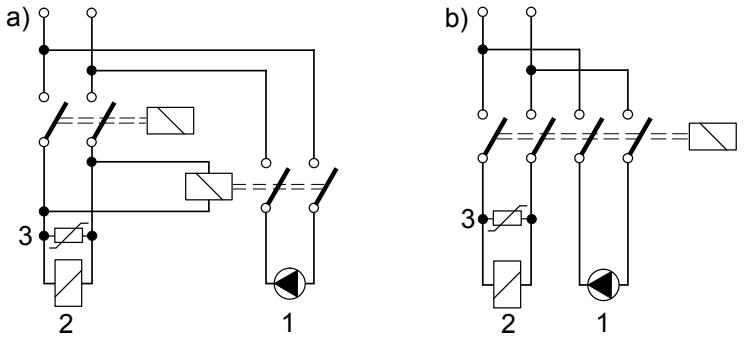

1 EXtronic
2 Inductive consumer
3 Varistor

1. Provide own contacts, supply voltage via contactor relay or relay.
2. With the 100 V to 230 V versions, connect Varistor (U_N = 275 V) or RC member (0.22 µF / 220 Ω) in parallel.

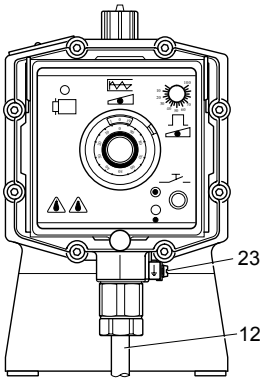

The connection terminal (23) for the potential equalisation line is located on the housing next to the mains connection (12).

Control inputs

Tab. 3: Contact, analogue and pause input not intrinsically safe

EXBbG	Input (+)	Black (1)
	Input (-)	Black (2)
EXBbM	Input (+)	blue
	Input (-)	black

Tab. 4: Contact, analogue and pause input intrinsically safe [i,a] (sheath colour: blue)

EXBbG	Input (+)	Black (1)
	Input (-)	Black (2)
EXBbM	Input (+)	blue
	Input (-)	black

Diaphragm rupture sensor (optional)

CAUTION!

Danger resulting from unnoticed diaphragm rupture

If the pump has been ordered with an electric diaphragm rupture sensor, it must also be electrically installed.

– Electrically wire the enclosed diaphragm rupture sensor to a suitable monitoring device.

Make sure that the monitoring/feed equipment installed by the customer is capable of evaluating the current variations of the Namur sensor to indicate a diaphragm rupture!

Tab. 5: Electrical connection for diaphragm rupture sensor, intrinsically safe [i,a] (sheath colour: blue)

EXBbG and EXBbM	Input (+)	Brown (1)
	Input (-)	Blue (2)

When using flammable media:

WARNING!

Risk of fire with flammable feed chemicals

Make sure that the electric diaphragm rupture sensor switches off the pump immediately after a diaphragm rupture.

– Connect the pump and diaphragm rupture sensor to a control so that the pump stops immediately in the event of a diaphragm rupture.

9 Start up

WARNING!

Danger of electric shock

A mains voltage may exist inside the pump housing.

– If the pump housing has been damaged, you must disconnect it from the mains immediately. It may only be returned to service after an authorised repair.

WARNING!

Dangerous reactions are possible due to contact of feed chemical with water

The feed chemical can mix and react in the liquid end with water remaining after testing in the factory.

– Read the safety data sheet on the feed chemical.
– Blast the liquid end with compressed air.
– Flush the liquid end with a suitable medium through the suction connector.

– *Before setting the stroke length, release the lock.*
– *Only adjust the stroke length when the pump is running.*

Completely reliable metering cannot be expected once the pump has come to a standstill,

which explains why the metering has to be checked regularly.

Pre-commissioning

1. Check that the pressure relief valves are working properly.
2. Check that the pump connectors and connections are not leaking and are connected correctly.

“Draining” the liquid end

Only with feed chemicals that may not come into contact with water:

1. Place the pump on its head.
2. Allow water to flow out of the liquid end.
3. Flush with a suitable medium from above through the suction connector.

Filling the liquid end

... with liquid end WITHOUT bleed valve:

1. Disconnect discharge line from liquid end.
2. Switch on pump using mains switch and allow it to run at maximum stroke length and stroke rate until the liquid end is filled completely and free of bubbles.
3. Switch off the pump.
4. Connect discharge line to liquid end.
   ⇨ The pump is now ready for operation.

Filling the liquid end, rough bleeding

... with liquid end WITH bleed valve:

1. Open the bleed valve (5) (by turning the star-shaped handle once in a counter-clockwise direction).
2. Switch on pump using mains switch and allow it to run at maximum stroke length and stroke rate until the liquid end is filled completely and free of bubbles (as soon as the feed chemical can be seen in the bleed and/or discharge line).
3. Close the bleed valve.
4. Switch off the pump.
   ⇨ The pump is now ready for operation.

Bleeding the liquid end

... if the pump is pumping into a pressure system and has drawn in air:

1. Set the discharge-side bleed valve: Release the metering line or open the bleed valve.
2. Switch on pump and vent with 100% stroke length.

Bleeding the liquid end

... with HV version:

Initial priming and bleeding is hampered by the fact that the valves and valve springs are still dry. Therefore:

- Use as short a priming lift as possible or for the feed / priming pressure, bleed on the suction side and liquid end.

If this doesn't help:

1. Unscrew the pressure connector and push the balls away from the O-ring.
2. Fill the liquid end with water or a suitable medium.
3. Fit pressure connector without valve springs.
4. Attach a short PVC hose piece (100 mm) to the hose nozzle and half fill with water or a suitable medium.
5. Allow the pump to run at maximum stroke length until the feed chemical appears in the hose.
6. Re-insert the valve springs – prevent it from tilting by placing a mandrel (with a diameter of approx. 4 mm) through the discharge valve. This holds the springs in a central position.
7. Re connect the discharge line.

CAUTION!
After 24 operating hours, re-tighten the screws on the dosing head.

Tightening torques

Data	Value	Unit
Tightening torques for M4 screws:	2.5 ... 3.0	Nm
Tightening torques for M5 screws:	4.5 ... 5.0	Nm

9.1 Determining pump capacity

The actual pump capacity depends on stroke length, stroke rate and back pressure in the metering line. The relationship between pump capacity/stroke length/stroke rate is depicted in a nomograph for each pump type. The diagram, which shows how the pump capacity changes in the event of back pressure, includes a correction factor (the nomographs can be found at the end of the operating instructions).

The measurements to produce the nomographs were taken using water and the correction factor is calculated with a stroke length of 70 %. The spread of pump capacities across all material versions is –5 % (for maximum: no details).

1. Select the desired pump capacity from the value of ranges for the pump type - see performance data.
2. Select the nomograph and diagram of the pump type.
3. On the diagram's X-coordinate, mark the back pressure in the metering system and read the associated correction factor off the X-axis.
4. Divide the desired pump capacity by the correction factor.
5. Use a ruler to mark the calculated pump capacity on the centre scale of the nomograph.
6. Draw a line across all three scales. Make it as horizontal as possible, ensuring however that at least one of the two outer scales is intersected; in so doing, wherever possible select a scale marking with a large value on the stroke length scale.

The point at which the line intersects with the right-hand scale indicates the stroke rate to be set, the point at which the line intersects with the left-hand scale indicates the stroke length to be set.

Example

Tab. 6: Input data

Pump capacity at medium back pressure:	11.9 l/h (refer to performance data)
Desired pump capacity:	6 l/h
Back pressure:	8 bar

Tab. 7: Calculation and results

Correction factor according to diagram:	0.9
Pump capacity to be set:	6 l/h / 0.9 = 6.66 l/h
Stroke length according to nomograph:	80 %
Stroke rate according to nomograph:	80 strokes/min

- *Select a large stroke length and low stroke rate for more viscous and gaseous media.*
- *Use a self-bleeding dosing head for gaseous media with a viscosity of ≤ 20 mPas.*
- *Select a low stroke height and high rate for good mixing.*
- *For precise metering, wherever possible select a stroke length of no less than 30 %; at maximum pressure, the stroke length should be:*

  .
  - *≥ 60 % for type 1601,*
  - *≥ 40 % for types 1201 and 1002,*
  - *≥ 20 % for type 0803;*

  the stroke length can be reduced further with lower pressure.

9.2 Setting the pump capacity

CAUTION!

Only adjust the stroke length when the pump is running.

If the stroke length control knob (14) is pressed without first releasing the lock (15), the adjustment of the stroke length control knob is altered!

Failure to observe the setting instructions may result in incorrect metering.

Requirements:

Pump installation and commissioning are complete.

The setting values have been calculated using the nomographs.

Switching on

1. Fold up transparent cover (17).
2. Switch on pump with mains switch.

Setting stroke length

1. Before setting the stroke length, release the lock lever:

   Push up lock lever (15).
2. Set the calculated stroke length with the stroke length control knob (14).

   The round scale on the stroke length control knob (14) indicates the stroke length in 0.01 mm steps - the inspection window (10) indicates them in 1 mm steps.

   The total setting range for stroke length is 0 to 1.25 mm (0.63 mm with pump type 1000).
3. Push down lock lever (15).

Setting stroke rate

- Set the calculated stroke rate with the rate control knob (16)

Correction for accurate metering

1. Calculate the capacity with a measuring cylinder on the suction side of the metering pump or by establishing the weight.
2. Correcting the pump setting.

10 Troubleshooting

Safety information

WARNING!

Warning of hazardous feed chemical

Should a dangerous feed chemical be used: it may escape from the hydraulic components when working on the pump, material failure or incorrect handling of the pump.

- Take appropriate protective measures before working on the pump (e.g. safety glasses, safety gloves, ...). Adhere to the material safety data sheet for the feed chemical.
- Drain and flush the liquid end before working on the pump.

CAUTION!

Warning of feed chemical spraying around

Feed chemical can spray out of the hydraulic components if they are manipulated or opened due to pressure in the liquid end and adjacent parts of the system.

- Disconnect the pump from the mains power supply and ensure that it cannot be switched on again by unauthorised persons.
- Depressurise the system before commencing any work on hydraulic parts.

Fault description	Cause	Remedy	Personnel
Pump does not prime in spite of full stroke motion and bleeding.	Minor crystalline deposits on the ball seat due to the valves drying out.	Take the suction hose out of the storage tank and thoroughly flush out the liquid end.	Technical personnel
	Heavy crystalline deposits on the ball seat due to the valves drying out.	Dismantle the valves and clean them - refer to "Repair".	Technical personnel
	Metering diaphragm ruptured and alarm has not sounded.	Immediately replace metering diaphragm - refer to "Repair".	Technical personnel
Diaphragm rupture warning system issues an alarm	The metering diaphragm is ruptured.	Immediately replace metering diaphragm - refer to "Repair".	Technical personnel
	Cable of diaphragm rupture sensor is broken.	Replace entire diaphragm rupture sensor.	Electrical technician with additional explosion protection qualification
Pump not metering even though the operating indicator is flashing	Stroke length too low	Increase stroke length with the stroke length control knob (14).	Technical personnel
	Air is trapped in the liquid end WITHOUT bleed valve	Bleed discharge side via a bleeder valve or relief valve.	Technical personnel
	Air is trapped in the liquid end WITH bleed valve	Use the bleed valve to bleed.	Technical personnel

Fault description	Cause	Remedy	Personnel
Fluid escapes from the backplate.	The screws in the dosing head are too loose.	Tighten screws in dosing head crosswise - refer to "Repair" for tightening torques.	Instructed personnel
	The metering diaphragm is not leak-tight.	Replace the metering diaphragm - refer to "Repair".	Technical personnel
Yellow LED display (operating indicator) does not light up.	The wrong mains voltage or no mains voltage is connected.	Connect the pump correctly to the specified mains voltage - according to the specification on the nameplate.	Electrician

11 Maintenance

WARNING!

It is mandatory that you read the safety information and specifications in the "Storage, Transport and Unpacking" chapter prior to shipping the pump.

WARNING!

Warning of hazardous feed chemical

Should a dangerous feed chemical be used: it may escape from the hydraulic components when working on the pump, material failure or incorrect handling of the pump.

– Take appropriate protective measures before working on the pump (e.g. safety glasses, safety gloves, ...). Adhere to the material safety data sheet for the feed chemical.
– Drain and flush the liquid end before working on the pump.

CAUTION!

Warning of feed chemical spraying around

Feed chemical can spray out of the hydraulic components if they are manipulated or opened due to pressure in the liquid end and adjacent parts of the system.

– Disconnect the pump from the mains power supply and ensure that it cannot be switched on again by unauthorised persons.
– Depressurise the system before commencing any work on hydraulic parts.

Standard liquid ends:

Interval	Maintenance work
10 000 operating hours	Replace the additional diaphragms - refer to the "Repair" chapter.
Quarterly*	■ Check the metering diaphragm for damage** - refer to "Repair". ■ Check that the hydraulic lines are fixed firmly to the liquid end. ■ Check that the discharge valve and suction valve are fitted tightly. ■ Check the leak-tightness of the entire liquid end. ■ Check that the flow is correct: Allow the pump to run briefly at maximum stroke rate - if fitted, briefly press the push-button or key switch. ■ Check that the electrical connectors are intact. ■ Check the integrity of the housing. ■ Check that the dosing head screws are tight.

* Under normal loading (approx. 30% of continuous operation).

Under heavy loading (e.g. continuous operation): Shorter intervals.

** Check the metering diaphragm frequently with feed chemicals that put particular pressure on the diaphragm, e.g. those containing abrasive additives.

Liquid ends with bleed valve:

Interval	Maintenance work
Quarterly*	In addition: ■ Check that the bypass line is fixed firmly to the liquid end. ■ Check that the bleed valve is tight. ■ Check the discharge and bypass line for kinks. ■ Check that the bleed valve is operating correctly.

* Under normal loading (approx. 30% of continuous operation).

Under heavy loading (e.g. continuous operation): Shorter intervals.

Tightening torques

Data	Value	Unit
Tightening torques for M4 screws:	2.5 ... 3.0	Nm
Tightening torques for M5 screws:	4.5 ... 5.0	Nm

12 Repair

Safety information

WARNING!

Danger of electric shock

Unauthorised repairs inside the pump can result in an electric shock or loss of explosion protection.

For this reason repairs inside the pump should only be carried out by a ProMinent branch office or representative, in particular the following:

- Replacement of damaged mains connection lines
- Replacement of fuses
- Replacement of electronic controller

WARNING!

It is mandatory that you read the safety information and specifications in the "Storage, Transport and Unpacking" chapter prior to shipping the pump.

WARNING!

Contact with the feed chemical

Parts that come into contact with the feed chemical are exposed and touched during repair work.

- Protect yourself against the feed chemical if it is hazardous. Read the safety data sheet on the feed chemical.

CAUTION!

Warning of feed chemical spraying around

Feed chemical can spray out of the hydraulic components if they are manipulated or opened due to pressure in the liquid end and adjacent parts of the system.

- Disconnect the pump from the mains power supply and ensure that it cannot be switched on again by unauthorised persons.
- Depressurise the system before commencing any work on hydraulic parts.

Repairs that may be carried out by qualified technical personnel, in accordance with the operating instructions:

- Cleaning valves
- Replacing the diaphragm

All other repairs: Contact the responsible ProMinent branch!

12.1 Replacing metering diaphragm

1. Flush the liquid end when using hazardous media:

   To do this, push water or an appropriate medium through the liquid end's suction connector.

2. With the pump running, set the stroke length to “0” with the stroke length control knob (14).
3. Switch off the pump.
4. Loosen the screws (24).
5. Pull dosing head (4) with screws (24) approx. 5 mm out of backplate (3) and pump housing until no more resistance can be felt through the screws (24) when attempting to turn the dosing head (4).
6. Hold housing and backplate (3) in the left hand and use the right hand to turn the dosing head (4) to the left in gentle jerks such that the metering diaphragm (25) releases from the drive axle.
7. Pull dosing head (4) with screws (24) from the diaphragm (25).
8. Unscrew the metering diaphragm (25) completely from the drive axle.

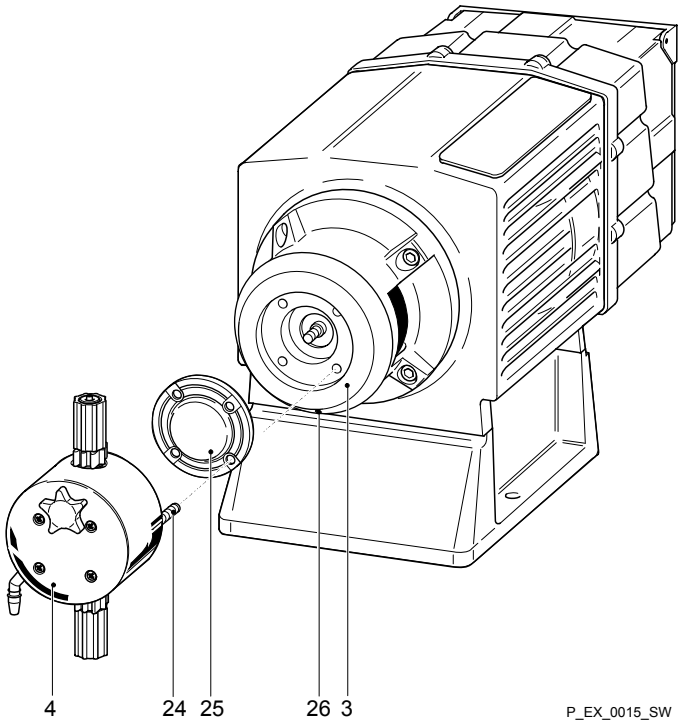

1. Check the thread’s ease of movement by screwing on the new metering diaphragm all the way up to the drive axle’s step and unscrewing it again.

CAUTION!
Only pump with diaphragm rupture sensor: replace the additional diaphragm behind the backplate with every second metering diaphragm or after 10,000 operating hours as well.

2. Place backplate (3) back on housing.

3. Insert metering diaphragm (25) in backplate (3) and screw on 2 threads.

> *Turn metering diaphragm (25) until the 4 holes of diaphragm (25) and backplate (3) are precisely aligned. The leakage hole (26) of backplate (3) must face downwards.*

4. For the following steps, see the next chapter.

12.2 Checking diaphragm rupture sensor

WARNING!

- Disconnect the diaphragm rupture sensor from the monitor.
- Protect yourself from the feed chemical if using hazardous or unknown feed chemicals.
- After a diaphragm rupture, there will be feed chemical in the diaphragm rupture sensor and feed channel in the backplate (3).
- The diaphragm rupture sensor must be checked after every diaphragm rupture and the separating diaphragm replaced if necessary (e.g. if the feed chemical has crystallised or dirt and particles are being pumped as well).

> – *When screwing the diaphragm rupture sensor in or out, ensure that the cable does not become too twisted.*
> – *Connect the monitor to check for electrical continuity.*

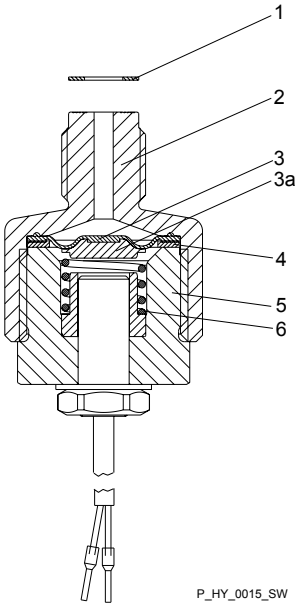

Fig. 23

1. When changing the diaphragm, unscrew the diaphragm rupture sensor from the dosing head.
2. Check that the monitor does not indicate a diaphragm rupture:
3. Using a blunt insulating probe (Ø 2 ... 3 mm, no sharp edges), press into the channel of the diaphragm rupture sensor.
   ⇨ The monitor device must indicate a diaphragm rupture.
4. Release the pin again.
   ⇨ The monitor must no longer indicate a diaphragm rupture.
5. Repeat the test several times.
6. If everything is working correctly, screw the diaphragm rupture sensor into the dosing head with a new seal (1).
7. If not, go to the next section.

12.3 Replacing separating diaphragm of the diaphragm rupture sensor

1. Disconnect the diaphragm rupture sensor from the monitor.
2. When changing the diaphragm, unscrew the diaphragm rupture sensor from the dosing head.
3. Grasp the upper section (2) of the diaphragm rupture sensor.

> *Do not manipulate the lacquer-protected nut.*

4. Hold the body (5) in place with an open-ended spanner.
5. Unscrew the top of the diaphragm rupture sensor.
6. Clean the soiled parts.
7. Lay the new separating diaphragm (3) with the light side (PTFE) down into the upper section (2).
8. Place the disc (4) in the upper section (2).
9. Place the spring inside the body (5).
10. Move the body (5) close to the upper section (2).
    ⇨ The spring (6) must sit correctly on the spring seat (3a).
11. Screw the body (5) into the upper section and tighten.
12. Connect the diaphragm rupture sensor back to the monitor.
13. Check the diaphragm rupture sensor as described in “Checking diaphragm rupture sensor".
14. If the diaphragm rupture sensor does not operate clearly and reliably, then a new diaphragm rupture sensor must be used without fail.
15. For the following steps, see the next chapter.

12.4 Installing dosing head

1. Place dosing head (4) with its screws (24) far enough onto the diaphragm (25) and the backplate (3) so that the parts can still be turned (distance of approx. 5 mm between dosing head and backplate); the suction connector and leakage hole must face downwards.
2. Now turn these parts clockwise until the twisting resistance of the return spring can be felt and the diaphragm is secure.

> **CAUTION!**
> Do not over-tighten the diaphragm.

3. Switch on the pump.
4. Use stroke length control knob (14) to set stroke length to 100 % and turn the entire liquid end to the right until the suction connector is pointing vertically downwards.
5. Switch off the pump.
6. Tighten the 4 screws (24) crosswise. See below for tightening torques.

CAUTION!

- Observe the tightening torques.
- Check the tightening torque again after 24 operating hours.
- With the PP version, also check the tightening torques again every three months.

Tightening torques

Data	Value	Unit
Tightening torques for M4 screws:	2.5 ... 3.0	Nm
Tightening torques for M5 screws:	4.5 ... 5.0	Nm

13 Decommissioning and disposal

13.1 Decommissioning

WARNING!

Danger from chemical residue

There is normally chemical residue in the liquid end and on the housing after operation. This chemical residue could be hazardous to people.

- It is mandatory that the safety information in the "Storage, transport and unpacking" chapter are read before shipping or transport.
- Thoroughly clean the liquid end and the housing of chemicals and dirt. Adhere to the material safety data sheet for the feed chemical.

WARNING!

Warning of hazardous feed chemical

Should a dangerous feed chemical be used: it may escape from the hydraulic components when working on the pump, material failure or incorrect handling of the pump.

- Take appropriate protective measures before working on the pump (e.g. safety glasses, safety gloves, ...). Adhere to the material safety data sheet for the feed chemical.
- Drain and flush the liquid end before working on the pump.

WARNING!

Fire hazard with flammable media

Only with flammable media: They can be ignited by oxygen.

- The pump may not work if there is a mixture of feed chemical with oxygen in the liquid end. A specialist may need to take appropriate actions (using inert gas, ...).

CAUTION!

Warning of feed chemical spraying around

Feed chemical can spray out of the hydraulic components if they are manipulated or opened due to pressure in the liquid end and adjacent parts of the system.

- Disconnect the pump from the mains power supply and ensure that it cannot be switched on again by unauthorised persons.
- Depressurise the system before commencing any work on hydraulic parts.

Danger of damage to the device

Take into account the information in the "Storage, transport and unpacking" chapter if the system is decommissioned for a temporary period.

1. Disconnect the pump from the mains/power supply.
2. Drain the liquid end by turning the pump upside down and allowing the feed chemical to run out.
3. Flush the liquid end with a suitable medium; flush the dosing head thoroughly when using hazardous feed chemicals!

13.2 Disposal

CAUTION!

Environmental hazard due to incorrect disposal

There are components in the pump, which can have a toxic effect on the environment.

– Note the pertinent regulations currently applicable in your country!

Sign indicating EU collection system

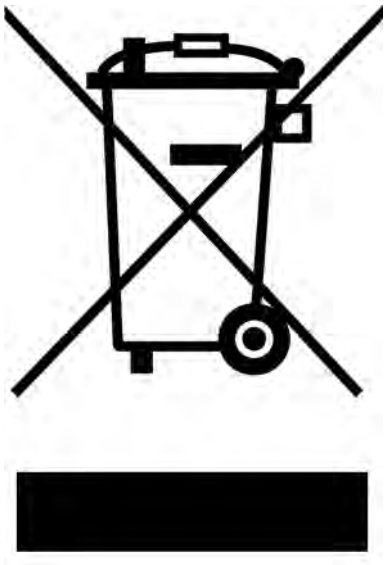

In accordance with the European Directive 2012/19/EU on waste electrical and electronic equipment, this device features the symbol showing a waste bin with a line through it. The device must not be disposed of along with domestic waste. To return the device, use the return and collection systems available and observe the local legal requirements.

14 Technical data

14.1 Performance data

Pump type	Maximum pump capacity at maximum back pressure					Maximum pump capacity rate at medium back pressure				
EXBb	bar	l/h	psi	gph	ml/ stroke	bar	l/h	psi	gph	ml/ stroke
1000	10	0.19	145	0.051	0.03	5	0.27	72.5	0.071	0.038
2501 SSM	25	1.14	362.5	0.301	0.16	12	1.4	181	0.369	0.19
1601 SSM	16	1.31	232	0.346	0.18	8	1.68	116	0.443	0.23
1601	16	1.00	232	0.265	0.14	8	1.3	116	0.343	0.18
1201	12	1.70	174	0.451	0.24	6	2.0	87	0.528	0.28
0803	8	3.70	116	0.981	0.51	4	3.9	58	1.029	0.54
1002	10	2.30	145	0.610	0.32	5	2.7	72.5	0.713	0.38
0308	3	8.60	44	2.281	1.20	1.5	10.3	22	2.719	1.43
2502	25	2.00	362.5	0.528	0.28	12	2.4	181	0.633	0.33
2505	25	4.20	362.5	1.110	0.64	12	5.3	181	1.399	0.80
1006	10	6.00	145	1.590	0.83	5	7.2	72.5	1.901	1.00
1310	13	10.50	188.5	2.783	1.59	6	11.9	94	3.141	1.80
0613	6	13.10	87	3.472	1.82	3	14.9	43	3.933	2.07
0814	8	14.00	116	3.710	1.12	4	15.4	58	4.065	2.33
0417	3.5	17.40	50.75	4.611	2.42	2	17.9	25.3	4.725	2.49
0430	3.5	27.00	50.75	7.155	4.09	2	29.5	25.3	7.788	4.7
0260	1.5	60.00	21.75	15.90	9.09	-	-	-	-	-

Type 1000 with ceramic seat discs in all material versions.

Type 2502, 2505, 1310 only in NP and SS versions

Pump type	Stroke rate	Connector size outside dimen-sion x inside diameter	Suction lift*	Priming lift**	Permissible pri-ming pressure, suction side
EXBb	Strokes/min	mm	m water column	m water column	bar
1000	120	6x4	1.5	0.5	8.0
2501 SSM	120	6x4	5	1.8	8.0
1601 SSM	120	6x4	5	1.8	8.0
1601	120	6x4	5	1.8	8.0
1201	120	6x4	5	2.5	5.5
0803	120	6x4	5	2.8	3.0

Pump type	Stroke rate	Connector size outside dimension x inside diameter	Suction lift*	Priming lift**	Permissible priming pressure, suction side
EXBb	Strokes/min	mm	m water column	m water column	bar
1002	120	8x5	5	1.0	3.0
0308	120	8x5	5	1.8	1.5
2502	120	8x5	5	1.0	8.0
2505	110	8x5	5	1.5	3.5
1006	120	8x5	5	1.3	3.5
1310	110	8x5	5	1.9	2.0
0613	120	8x5	5.5	1.9	2.0
0814	110	12x9	5	2.0	1.5
0417	120	12x9	4.5	2.0	1.5
0430	110	DN10	5	1.8	0.8
0260	110	DN15	1.5	1.5	0.8

* Suction lift: with filled suction line

** Priming lift: with an empty suction line

Tab. 8: Metering pumps for media of higher viscosity "HV"

Pump type	Maximum pump capacity at maximum back pressure					Maximum pump capacity rate at medium back pressure				
EXBb	bar	l/h	psi	gph	Ml / stroke	bar	l/h	psi	gph	Ml / stroke
1002	10	2.30	145	0.607	0.31	5	2.7	72.5	0.713	0.38
1006	10	6.00	145	1.585	0.83	5	7.2	72.5	1.902	1.00
1310	10	10.50	145	2.773	1.59	6	11.9	87	3.143	1.80
0814	8	14.00	116	3.698	2.12	4	15.4	58	4.068	2.33

1 gal= 3.78 l

Pump type	Stroke rate	Connector size outside dimension x inside diameter	Suction lift*	Priming lift**	Permissible priming pressure, suction side
EXBb	Strokes/min	mm	m water column	m water column	bar
1002	120	DN10	1.0	-	3.0
1006	120	DN15	1.3	-	3.5
1310	110	DN15	1.9	-	2.0
0814	110	DN15	2.0	-	1.5

* Suction lift: with filled suction line

** Priming lift: with an empty suction line

*Tab. 9: Metering pumps with self-bleeding dosing head ****

Pump type	Maximum pump capacity at maximum back pressure					Maximum pump capacity rate at medium back pressure				
EXBb	bar	l/h	psi	gph	Ml / stroke	bar	l/h	psi	gph	Ml / stroke
1601	16	0.66	232	0.174	0.09	-	-	-	-	-
1201	12	1.0	274	0.265	0.14	-	-	-	-	-
0803	8	2.4	116	0.634	0.33	-	-	-	-	-
1002	10	1.8	145	0.476	0.25	-	-	-	-	-

*** The given performance data represents guaranteed minimum values, calculated using water at room temperature

1 gal= 3.78 l

Pump type	Stroke rate	Connector size outside dimension x inside diameter	Suction lift*	Priming lift**	Permissible priming pressure, suction side
EXBb	Strokes/min	mm	m water column	m water column	bar
1601	120	6x4	-	1.8	0.2
1201	120	6x4	-	2.0	0.2
0803	120	6x4	-	2.8	0.2
1002	120	6x4	-	2.0	0.2

* Suction lift: with filled suction line

** Priming lift: with an empty suction line

14.2 Precision

min.: -5 %, max.: not specified

with max. stroke length and max. back pressure for all material versions.

better than ± 2 %

under constant conditions and at least 30% stroke length;

Note the following information:

- All figures refer to dosing measurements with water at 20 °C.
- Constant back pressure, if possible above 1 bar.
- If metering at atmospheric pressure, a back pressure valve must be used to create a back pressure of at least 1.5 bar (note the installation examples).
- Wherever possible, lay suction and metering lines on a continuously rising gradient.
- If the liquid level of the storage tank lies above the pump when in operating mode, the priming pressure lies against the suction side; in this case, the back pressure should be high enough to ensure a minimum pressure difference of 1.5 bar; alternatively, use a back pressure valve or a spring-loaded injection valve with corresponding priming pressure.

14.3 Material specifications

	PP1	PP4	PC5	NP1 /NP3	NS3	PS3	TT1	SS_
Dosing head	Polypro-pylene	Polypro-pylene	PVC	Clear acrylic	Clear acrylic	PVC	PTFE with carbon	Stainless steel 1.4404
Suction / pressure connector	Polypro-pylene	Polypro-pylene	PVC	PVC	PVC	PVC	PTFE with carbon	Stainless steel 1.4404
Seals	EPDM	EPDM	FPM-A	FPM-A/B	FPM-B	FPM-B	PTFE	PTFE
Balls Ø 6 ... Ø 12	Ceramic	-	Ceramic	Ceramic	Ceramic	Ceramic	Ceramic	Ceramic
Balls DN10 ... DN15	Glass	Ceramic	-	Glass	-	-	Ceramic	Stainless steel 1.4401

Type 1000: with ceramic seat discs in all material versions

PP4: with valve springs made of Hastelloy C

DEVELOPAN® metering diaphragm with PTFE coating with all versions

14.4 Weight

Pump type	Material	EXBbG	EXBbM
1000, 2501.1601, 1201, 0803, 1002, 0308	NP, PP, TT / SS, SB	approx. 12/16 kg	approx. 26/30 kg
2502, 1006, 0613, 0417	NP, PP, TT / SS, SB	approx. 13/17 kg	approx. 27/31 kg
2505, 1310, 0814, 0430, 0260	NP, PP, TT / SS, SB	approx. 16/20 kg	approx. 30/34 kg

14.5 Electrical data

14.5.1 Electrical data for actuation current circuits

14.5.1.1 with "non-intrinsically safe" design

Tab. 10: mA input, identity code feature "control type": 2, 3, 5, 6**

Maximum voltage:	6 V
Maximum current:	30 mA
Input apparent ohmic resistance approx.:	94 Ω

Tab. 11: Contact/pause input, identity code feature "Control type": 1 4, 7, 8**

Voltage with open contact approx.:	5 V
Input resistance approx.:	4.7 kΩ

	Control using potential-free contact or semiconductor switch:	
	Residual current max. (contact open):	70 µA
	Contact resistance (closed) max.: or Maximum drop in voltage:	10 kΩ 3 V
	Maximum pulse frequency:	40 pulses/s
	Pulse width min.:	10 ms

* To ensure intrinsic safety - see *Chapter 14.5.1.2 'For "intrinsically safe" version' on page 51*

14.5.1.2 For "intrinsically safe" version

Tab. 12: Output value, all "[ia]" versions

Maximum output voltage U_0	7.14 V
Maximum output current I_0	5 mA
Maximum output power P_0	23.3 mW
Internal resistance R_i (trapezoid-shaped output characteristics curve)	4296 Ω
Maximum outer capacity C_0	13.5 µF
Maximum outer inductance L_0	1 H

Tab. 13: To connect an intrinsically safe power circuit

Maximum input voltage U_i	30 VDC
Maximum input current I_i	280 mA
Maximum input power P_i	2 W
Effective inner inductance L_i	negligible
Effective inner capacity C_i	negligible

14.5.1.3 Diaphragm rupture sensor, intrinsically safe (optional)

Type: Pepperl+Fuchs, NJ1.5-8GM-N-V1

Tab. 14

Nominal voltage NAMUR (Ri approx. 1 kΩ)	8.2 V
Measuring plate detected	≤ 1mA
Measuring plate not detected	≥ 3mA
Effective inner capacitance* CI	≤ 30 nF
Effective inner inductance* LI	≤ 50 µH

* A cable length of 10 m is taken into account.

For detailed data and when using in areas at risk of explosion, observe operating instructions and type examination certificate of diaphragm rupture sensor.

14.5.2 Electrical data for supply current circuit

14.5.2.1 For "non-intrinsically safe" version

Rated voltage:	100, 115 ± 10 %	VAC
	200, 230 ± 10 %	VAC
	500 ± 10 %	VAC
Maximum current consumption I_{eff}*:	1.5	A
Max. peak current during a stroke I_{peak}:	8	A
Maximum power consumption P_{wirk}*:	50	W

* obtained by averaging over several strokes at the maximum stroke rate

14.5.2.2 For "intrinsically safe" version

Rated voltage:	100, 115 ± 10 %	VAC
	200, 230 ± 10 %	VAC
	500 +6% -10%	VAC
Maximum current consumption I_{eff}*:	1.5	A
Max. peak current during a stroke I_{peak}:	8	A
Maximum power consumption P_{wirk}*:	50	W

* obtained by averaging over several strokes at the maximum stroke rate

14.5.3 Electrical data, details

Tab. 15: Pump types 1000, 2501,1601, 1201, 0803, 1002, 0308

Mains connection (V)	100	115	200	230	500
Max. current consumption*** (A)	1.6	1.4	0.7	0.8	0.3
Effective power consumption[1] (A)	0.27	0.29	0.14	0.17	0.09
Mean power consumption (W)	16	16	16	16	16
Fuse item 65* value (A)	1.0T	0.63T	0.4T	0.315T	0.319
Fuse item 66** value (A)	0.16T	0.16T	0.16T	0.16T	-

Tab. 16: Pump types 1002[2], 2502, 1006, 0613, 0417

Mains connection (V)	100	115	200	230	500
Max. current consumption*** (A)	3.0	2.7	1.8	1.8	0.6
Effective power consumption[1] (A)	0.70	0.70	0.33	0.41	0.14
Mean power consumption (W)	35	35	35	35	35
Fuse item 65* value (A)	2.5T	2.0T	1.25T	0.8T	0.63
Fuse item 66** value (A)	0.16T	0.16T	0.16T	0.16T	-

Tab. 17: Pump types 2505, 1310, 0814, 0430, 0260

Mains connection (V)	100	115	200	230	500
Max. current consumption*** (A)	4.1	3.6	2.2	2.5	1.1
Effective power consumption[1] (A)	0.95	0.84	0.47	0.53	0.25
Mean power consumption (W)	47	47	47	47	47
Fuse item 65* value (A)	3.15T	2.5T	1.6T	1.25T	1.25
Fuse item 66** value (A)	0.16T	0.16T	0.16T	0.16T	-

* special fuse with high switching capacity: only use original fuse

** use only original fuse

*** effective value during a stroke

[1] obtained by averaging over several strokes at the maximum stroke rate

[2] for PP4 material version

.

Fuse order numbers, see “Ordering information for fuses” chapter.

CAUTION!
Only the effective power consumption is specified on the nameplate.

14.6 Ambient conditions

Temperatures

Permissible storage and transport temperature:	-20 ... +50 °C	-4 °F ... +122 °F
Permissible ambient temperature during operation (power end/drive and control):	-20 ... +45 °C	-4 °F ... +113 °F
Permissible temperature during operation (liquid ends):	-10 °C ... see table	-4 °F ... see table

Liquid ends

Material version	Long periods at max. back pressure	Temporary *
NP_	45 °C (113 °F)	60 °C (140 °F)
PP_	50 °C (122 °F)	60 °C (140 °F)
PS_	45 °C (113 °F)	-
SB_	50 °C (122 °F)	60 °C (140 °F)
SS_	50 °C (122 °F)	60 °C (140 °F)
TT_	50 °C (122 °F)	60 °C (140 °F)

* Max. temp., for 15 min at max. 2 bar, depending on the ambient temperature

Climate

Permissible air humidity:	92 % non-condensing
Exposure in a humid and changing climate:	IEC 60068-2-78

Degree of protection

Degree of protection	IP 65 (IEC 60529)

14.7 Sound pressure level

Sound pressure level

Sound pressure level	≤ 70 dB (A) at distance of 1 m according to EN 23741

15 Dimensional drawing

ProMinent EXtronic® EXBb Dimensions in mm

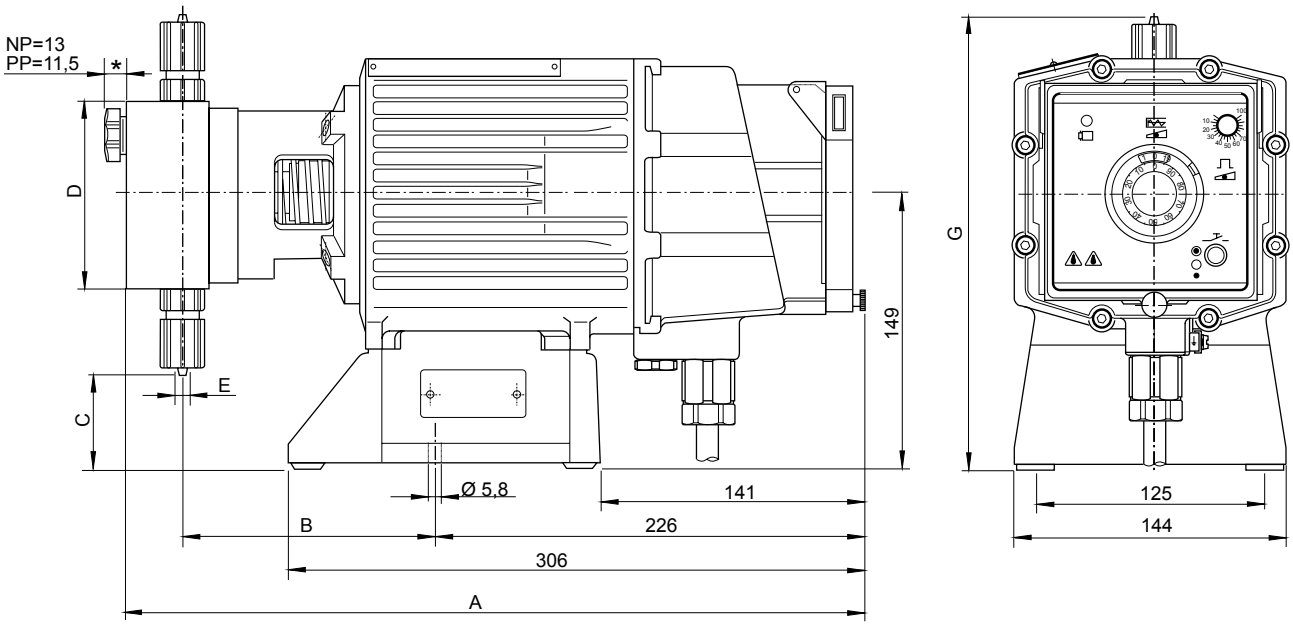

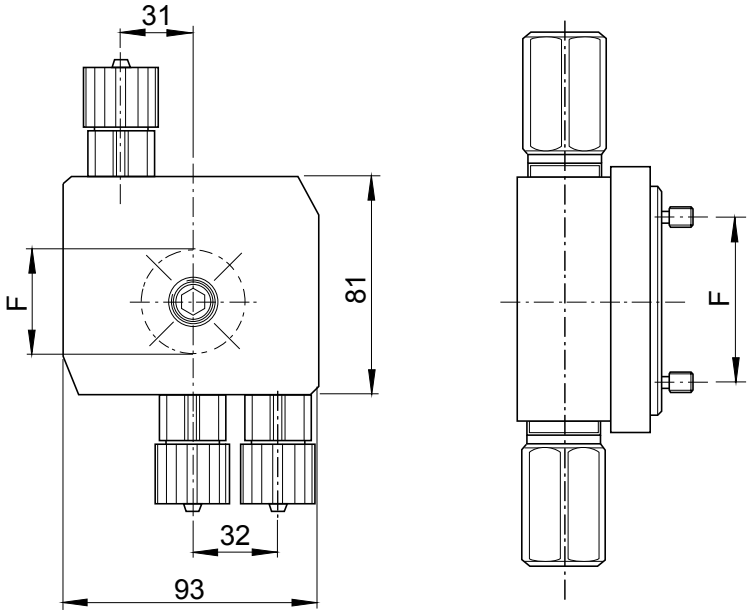

Version ,,NS, PS“ Version ,,SB“

Type	Material version	A	B	C	Ø D	E	Ø F	G
1000, 1601, 1201, 0803	NP1	391	136	69	70	6x4	38	229
1002, 0308, 2502, 2505, 1006	NP3	391	136	61	85	8x5	50	237
1310, 0613		391	136	52	100	8x5	66	244
0814, 0417		391	136	52	100	12x9	66	244
0430		381	137	46	135	DN10	117	304

Type	Material version	A	B	C	Ø D	E	Ø F	G
0260		398	142	-16	135	DN15	117	314
1000, 1601, 1201, 0803	PP1	393	136	67	70	6x4	38	236
1002, 0308, 1006		393	136	67	70	8x5	50	236
0613		393	136	57	90	8x5	66	246
0814, 0417		393	136	57	90	12x9	66	246
0430		381	137	46	135	DN10	117	304
0260		398	142	-16	135	DN15	117	314
1002	PP4	389	138	46	85	DN10	50	222
1006		398	145	76	85	DN15	50	222
1310		398	145	76	85	DN15	66	222
0814		398	145	69	100	DN15	66	229
1000, 1601, 1201	TT1	378	134	75	60	6x4	38	223
0803		378	134	70	70	6x4	38	228
1002, 0308, 1006		388	138	42	80	8x5	50	256
0613		388	138	32	95	8x5	66	266
0814, 0417		388	138	32	95	12x9	66	266
0430		388	137	35	135	DN10	117	263
0260		398	142	31	135	DN15	117	268
1000, 1601, 1201	SS1	376	134	84	60	6x5	38	214
0803		376	134	79	70	6x5	38	219
1002, 0308, 2502, 2505, 1006		386	138	48	80	8x7	50	250
1310, 0613		386	138	39	95	8x7	66	259
0814, 0417		386	138	39	95	12x10	66	259
0430		386	137	35	135	DN10	117	263
0260		390	142	28	135	DN15	117	271
1601, 2501	SSM	391	149	84	60	6x5	38	214
1000	SB1	373	134	87	70	Rp 1/4	38	211
1601, 1201, 0803		373	134	79	85	Rp 1/4	38	219
1002, 0308, 2502, 2505, 1006		381	138	56	80	Rp 1/4	50	242
1310, 0613		381	138	48	95	Rp 1/4	66	250
0814, 0417		381	138	48	95	Rp 1/4	66	250

Type	Material version	A	B	C	Ø D	E	Ø F	G
0430		381	138	22	145	Rp 1/4	117	275
0260		383	139	27	145	Rp 1/2	117	279
1601, 2501	SBM	388	149	79	85	Rp 1/4	38	219
1601, 1201, 0803	NS3	383	136	67	*	6x4	38	243
1002		383	136	67	*	6x4	50	243
1601, 1201, 0803	PS3	383	136	67	*	6x4	38	243
1002		383	136	67	*	6x4	50	243

16 Nomographs

EXBb_1000

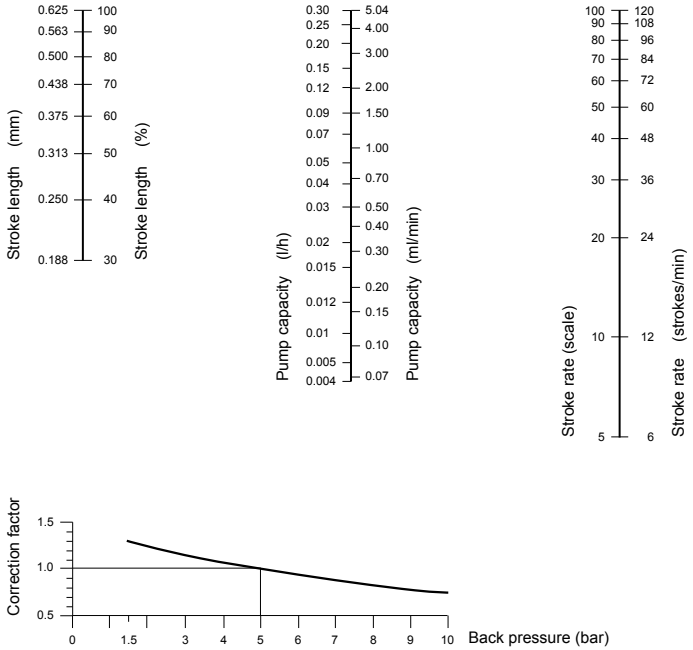

Pump capacity in relation to back pressure

Pump capacity 0.27 l/h at medium back pressure of 5 bar

Pump capacity 0.19 l/h at maximum back pressure of 10 bar

EXBb_2501

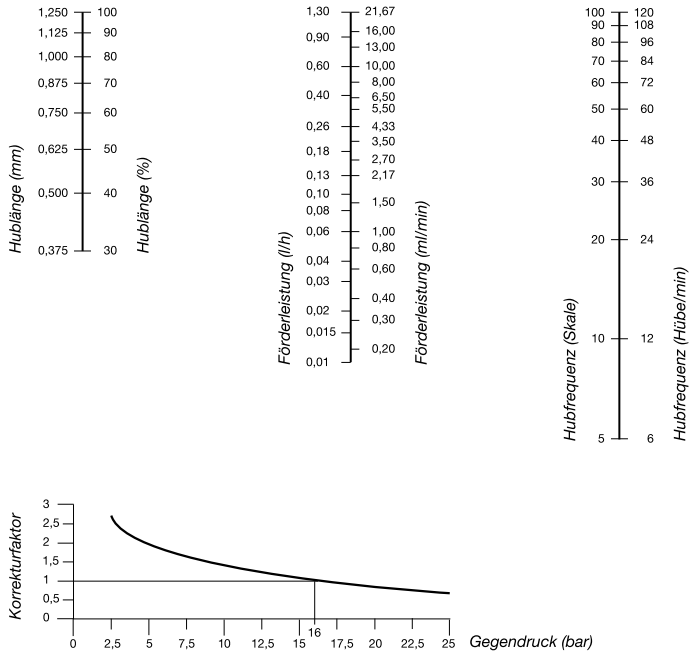

Fig. 24

Pump capacity in relation to back pressure

Pump capacity 1.30 l/h at medium back pressure of 16 bar

Pump capacity 1.10 l/h at maximum back pressure of 25 bar

EXBb_1601

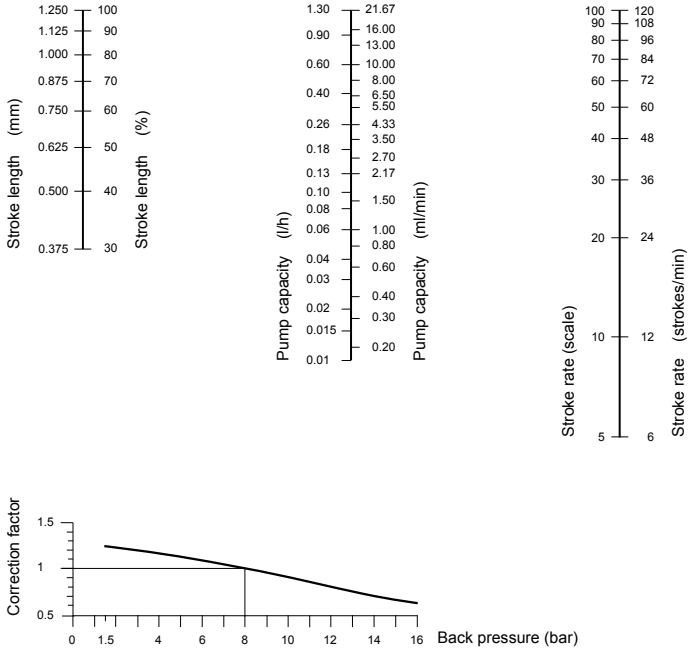

Fig. 25

Pump capacity in relation to back pressure

Pump capacity 1.30 l/h at medium back pressure of 8 bar

Pump capacity 1.00 l/h at maximum back pressure of 16 bar

EXBb_1201

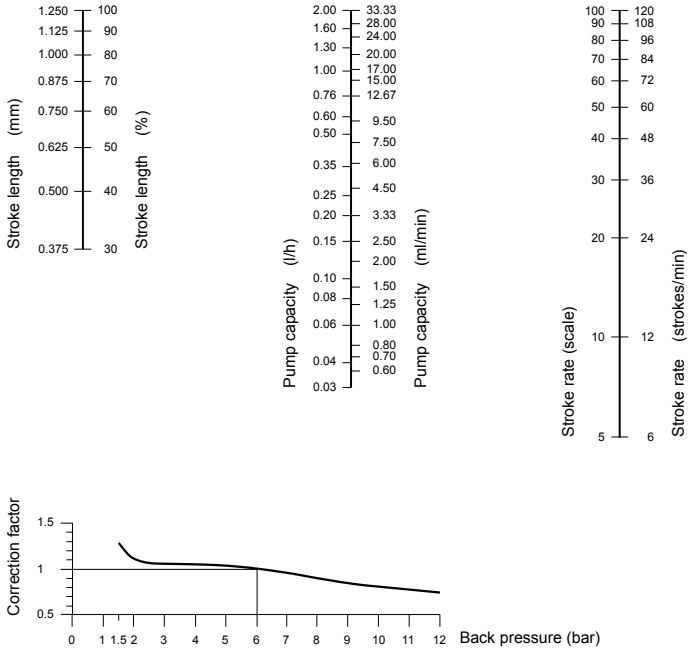

Fig. 26

Pump capacity in relation to back pressure

Pump capacity 2.0 l/h at medium back pressure of 6 bar

Pump capacity 1.70 l/h at maximum back pressure of 12 bar

EXBb_0803

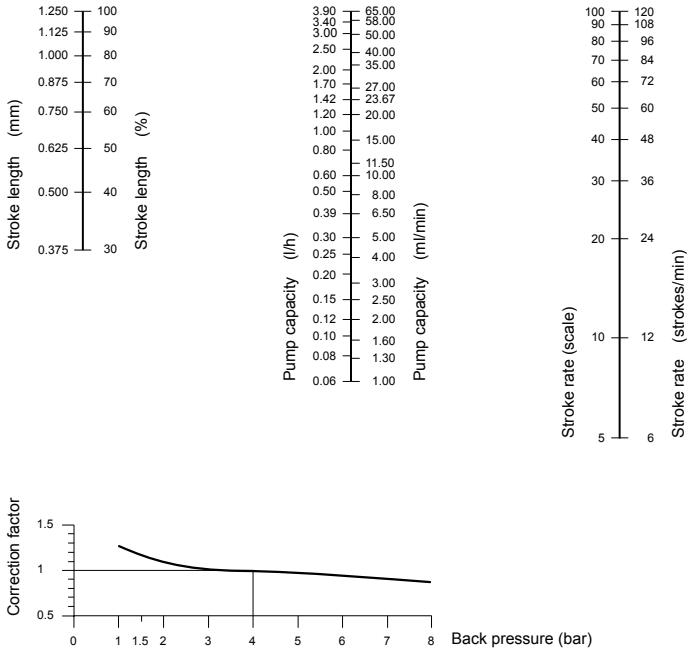

Fig. 27

Pump capacity in relation to back pressure

Pump capacity 3.9 l/h at medium back pressure of 4 bar

Pump capacity 3.70 l/h at maximum back pressure of 8 bar

EXBb_1002

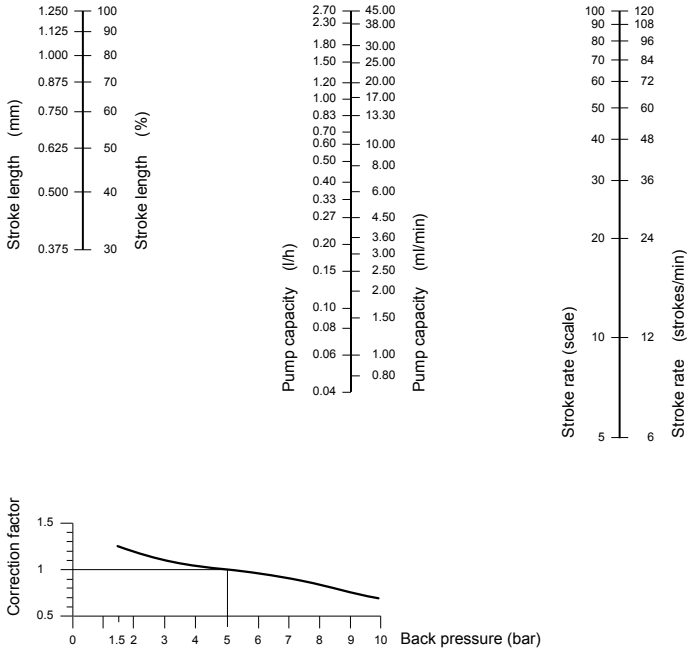

Fig. 28

Pump capacity in relation to back pressure

Pump capacity 2.70 l/h at medium back pressure of 5 bar

Pump capacity 2.30 l/h at maximum back pressure of 10 bar

EXBb_0308

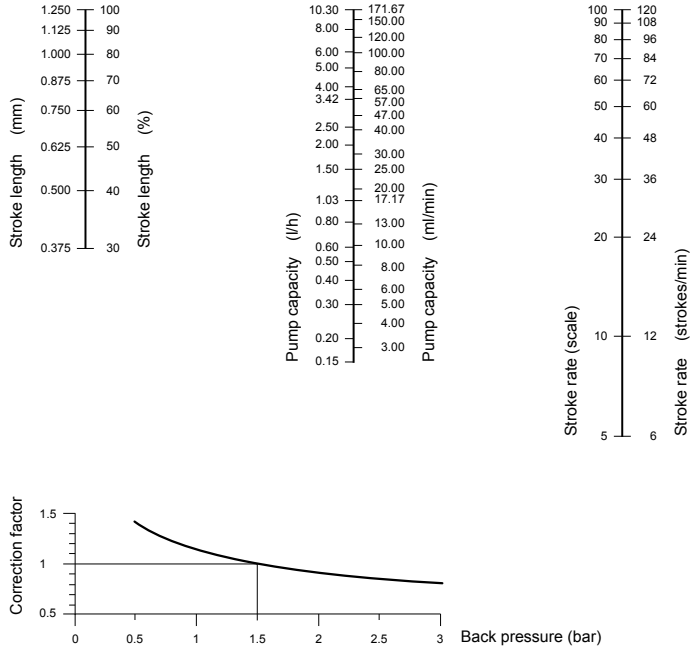

Fig. 29

Pump capacity in relation to back pressure

Pump capacity 10.3 l/h at medium back pressure of 1.5 bar

Pump capacity 8.70 l/h at maximum back pressure of 3 bar

EXBb_2502

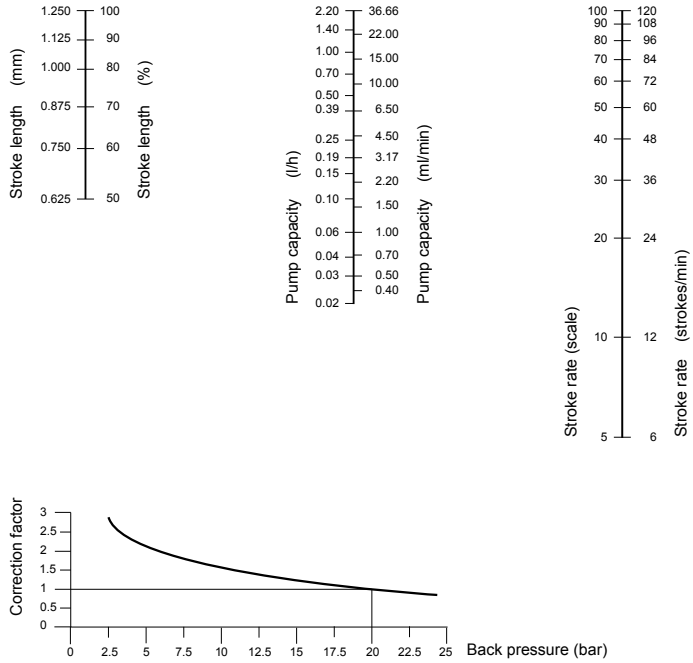

Fig. 30

Pump capacity in relation to back pressure

Pump capacity 2.20 l/h at medium back pressure of 20 bar

Pump capacity 2.00 l/h at maximum back pressure of 25 bar

EXBb_2505

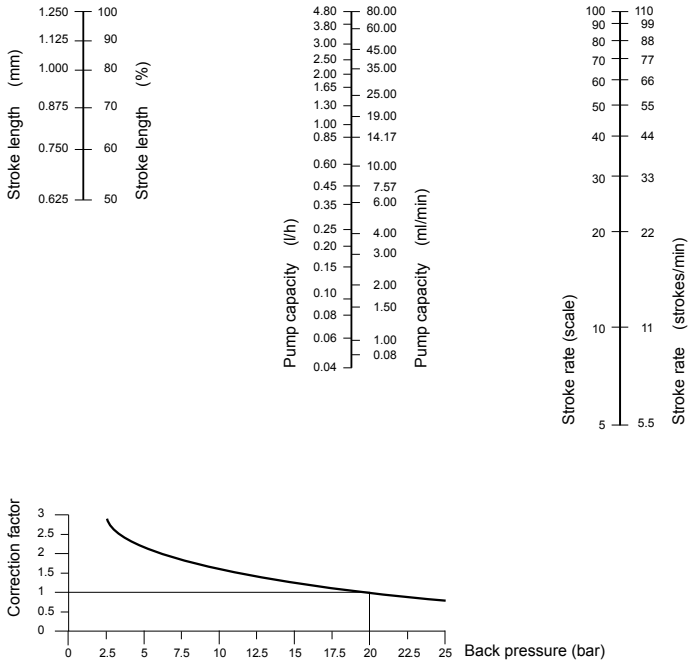

Fig. 31

Pump capacity in relation to back pressure

Pump capacity 4.80 l/h at medium back pressure of 20 bar

Pump capacity 4.20 l/h at maximum back pressure of 25 bar

EXBb_1006

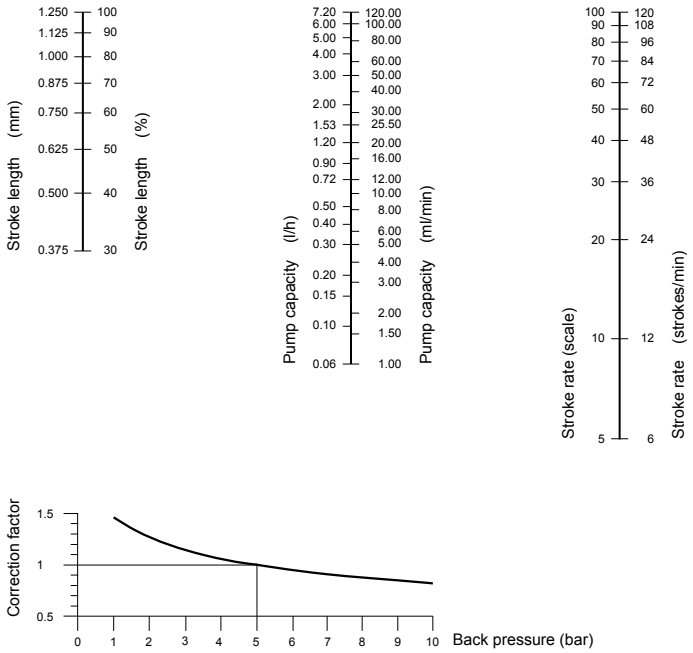

Fig. 32

Pump capacity in relation to back pressure

Pump capacity 7.20 l/h at medium back pressure of 5 bar

Pump capacity 6.00 l/h at maximum back pressure of 10 bar

EXBb_1310

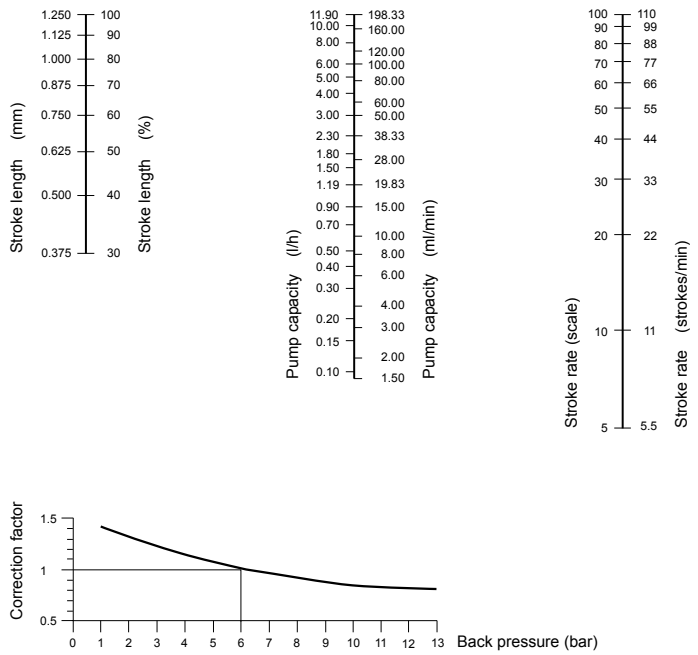

Fig. 33

Pump capacity in relation to back pressure

Pump capacity 11.90 l/h at medium back pressure of 6 bar

Pump capacity 10.50 l/h at maximum back pressure of 13 bar

EXBb_0613

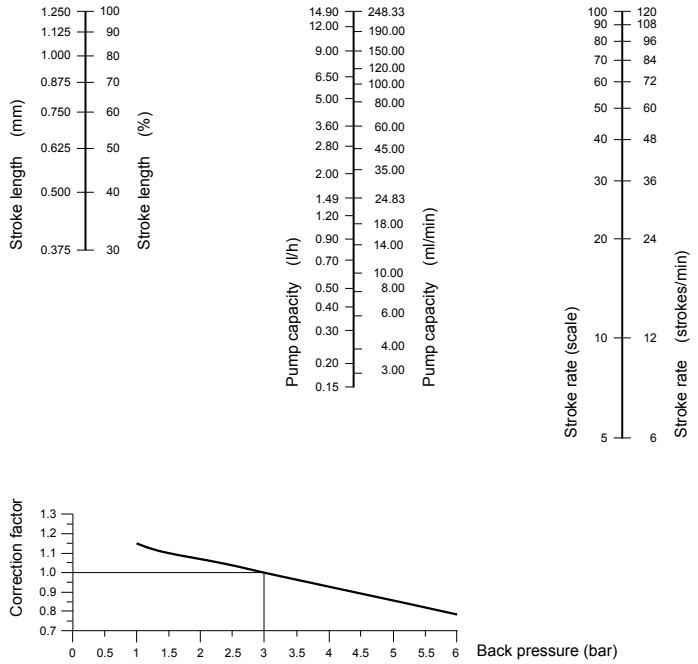

Fig. 34

Pump capacity in relation to back pressure

Pump capacity 14.90 l/h at medium back pressure of 3 bar

Pump capacity 13.10 l/h at maximum back pressure of 6 bar

EXBb_0814

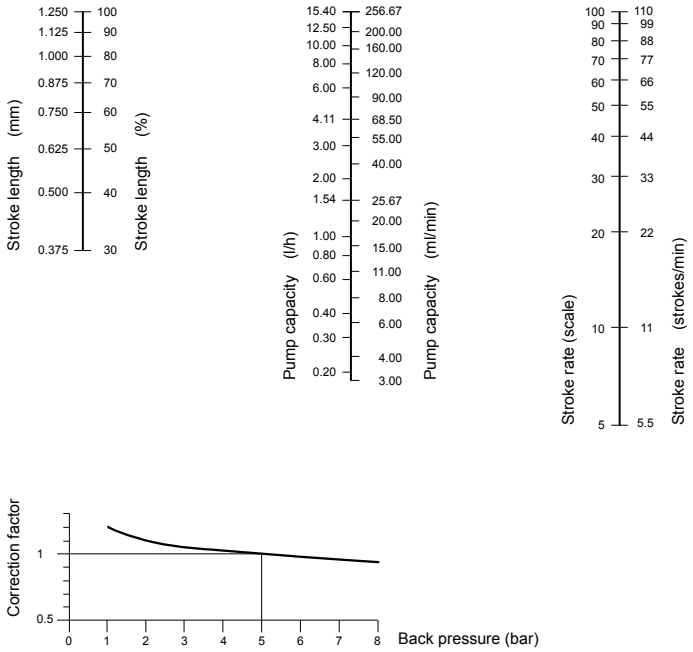

Fig. 35

Pump capacity in relation to back pressure

Pump capacity 15.40 l/h at medium back pressure of 5 bar

Pump capacity 14.00 l/h at maximum back pressure of 8 bar

EXBb_0417

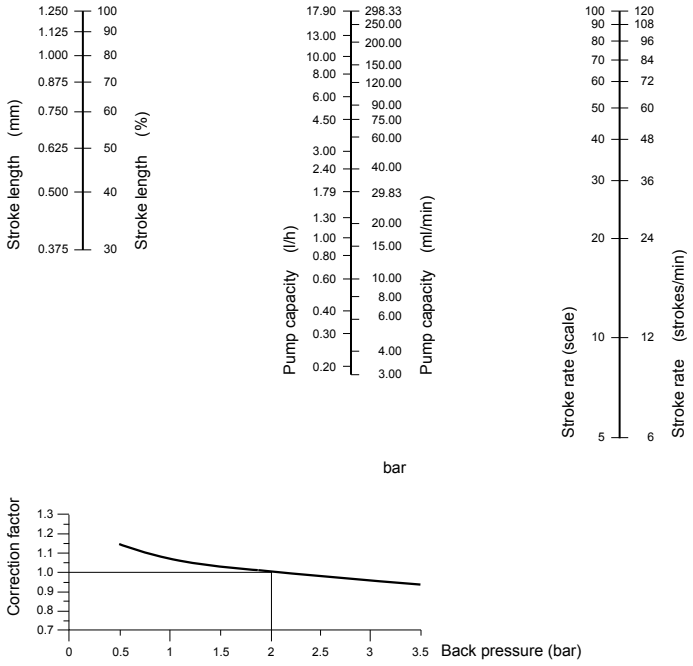

Fig. 36

Pump capacity in relation to back pressure

Pump capacity 17.90 l/h at medium back pressure of 2 bar

Pump capacity 17.40 l/h at maximum back pressure of 3.5 bar

EXBb_0430

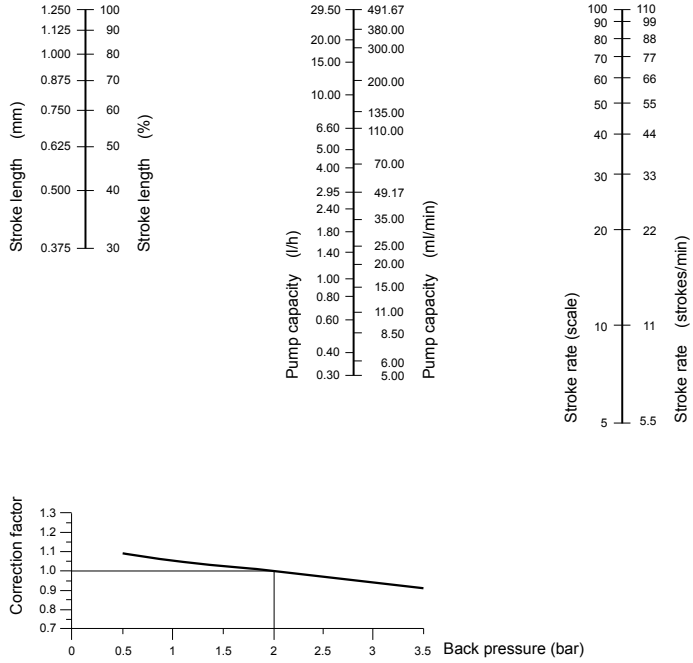

Fig. 37

Pump capacity in relation to back pressure

Pump capacity 29.50 l/h at medium back pressure of 2 bar

Pump capacity 27.00 l/h at maximum back pressure of 3.5 bar

EXBb_0260

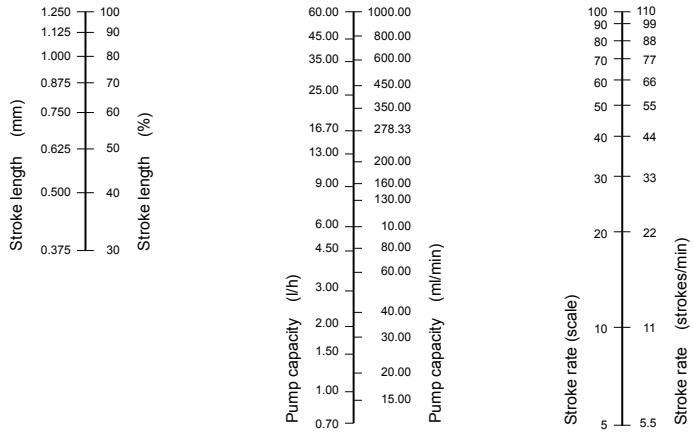

Fig. 38

Pump capacity in relation to back pressure

Pump capacity 60.00 l/h at maximum back pressure of 1.5 bar

17 Ordering information for fuses

Fuses

Even if the pump drive is not to be opened under any circumstances, we would recommend:

keeping suitable fuses in stock so that the service team has them to hand immediately if needed.

Tab. 18: Fuse item 65

Voltage	Pump types	Fuse data	Order no.
100 V	1000.1601, 1201, 0803, 1002, 0308	5x20 T 1.0A (1.5kA)	732409
100 V	2502,1006,0613,0417,1002HV	5x20 T 2.5A (1.5kA)	732413
100 V	2505,1310,0814,0430,0260	5x20 T 3.15A (1.5kA)	732414
115 V	1000.1601, 1201, 0803, 1002, 0308	5x20 T 630 mA (1.5kA)	732407
115 V	2502,1006,0613,0417,1002HV	5x20 T 2.0 A (1.5kA)	732412
115 V	2505,1310,0814,0430,0260	5x20 T 2.5 A (1.5kA)	732413
200 V	1000.1601, 1201, 0803, 1002, 0308	5x20 T 400mA (1.5kA)	732405
200 V	2502,1006,0613,0417,1002HV	5x20 T 1.25A (1.5kA)	732410
200 V	2505,1310,0814,0430,0260	5x20 T 1.6A (1.5kA)	732411
230 V	1000.1601, 1201, 0803, 1002, 0308	6.3x32 T 315 mA 500V (1,5kA)	732404
230 V	2502,1006,0613,0417,1002HV	6.3x32 T 800 mA 500V (1,5kA)	732408
230 V	2505,1310,0814,0430,0260	6.3x32 T 1.25 A 500V (1,5kA)	732410
500 V	1000.1601, 1201, 0803, 1002, 0308	6.3x32 T 315 mA 500V (1,5kA)	732371
500 V	2502,1006,0613,0417,1002HV	6.3x32 T 630 mA 500V (1,5kA)	732372
500 V	2505,1310,0814,0430,0260	6.3x32 T 1.25 A 500V (1,5kA)	733150

Tab. 19: Fuse item 66

Voltage	Pump types	Fuse data	Order no.
100 ... 230 V	all	5x20 T 160 mA (35A)	712048

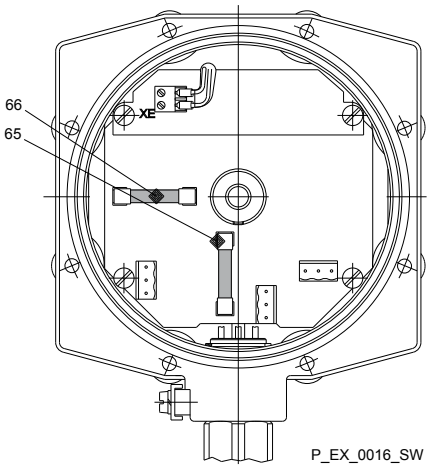

Fig. 39

18 Declaration of Conformity

We,

- ProMinent GmbH
- Im Schuhmachergewann 5 - 11
- DE - 69123 Heidelberg, Germany,

hereby declare that the product specified in the following, complies with the relevant basic health and safety requirements of the Directive, on the basis of its functional concept and design and in the version distributed by us.

Any modification to the product not approved by us invalidates this declaration.

Tab. 20: Excerpt from the Declaration of Conformity

Designation of the product:	Metering pump, product range EXtronic Design for use in areas at risk of explosion in accordance with the ATEX Directive (2014/34/EC)
Product type:	EXBb _ _ _ _ _ _ _ _ _ _ § _ _ _ § = "A" or "B" or "C" or "D"
Serial number:	see nameplate on the device
Relevant directives:	ATEX Directive (2014/34/EU) No. of the EC type test certificate: DMT 03 ATEX E 023 Certification centre: DEKRA EXAM GmbH Certification centre no.: 0158 Machinery Directive (2006/42/EC) EMC Directive (2014/30/EU) Compliance with the protection targets of the Low Voltage Directive 2014/35/EU according to Appendix I, No. 1.5.1 of the Machinery Directive 2006/42/EC RoHS Directive (2011/65/EU)
Harmonised standards applied, in particular:	EN 60079-0:2012 + A11:2013, EN 60079-1:2014 EN 60079-11:2012 EN 50303:2000, EN 1127-1:2011 EN ISO 80079-36:2016, EN ISO 80079-37:2016 EN ISO 12100:2010 EN 809:1998 + A1:2009 + AC:2010 EN 61000-6-2:2005, EN 61000-6-3:2007 + A1:2011 EN 50581:2012
Date:	22.07.2019

You can download the Declaration of Conformity at www.prominent.com.

19 Index

Q

R

S

T

U

V

W

ProMinent GmbH
Im Schuhmachergewann 5-11
D-69123 Heidelberg, Germany
Telephone: +49 6221 842-0
Fax: +49 6221 842-419
Email: info@prominent.com
Internet: www.prominent.com

987094, 4, en_GB