Operating instructions

Solenoid Metering Pump

Beta® b BT4b and BT5b

EN

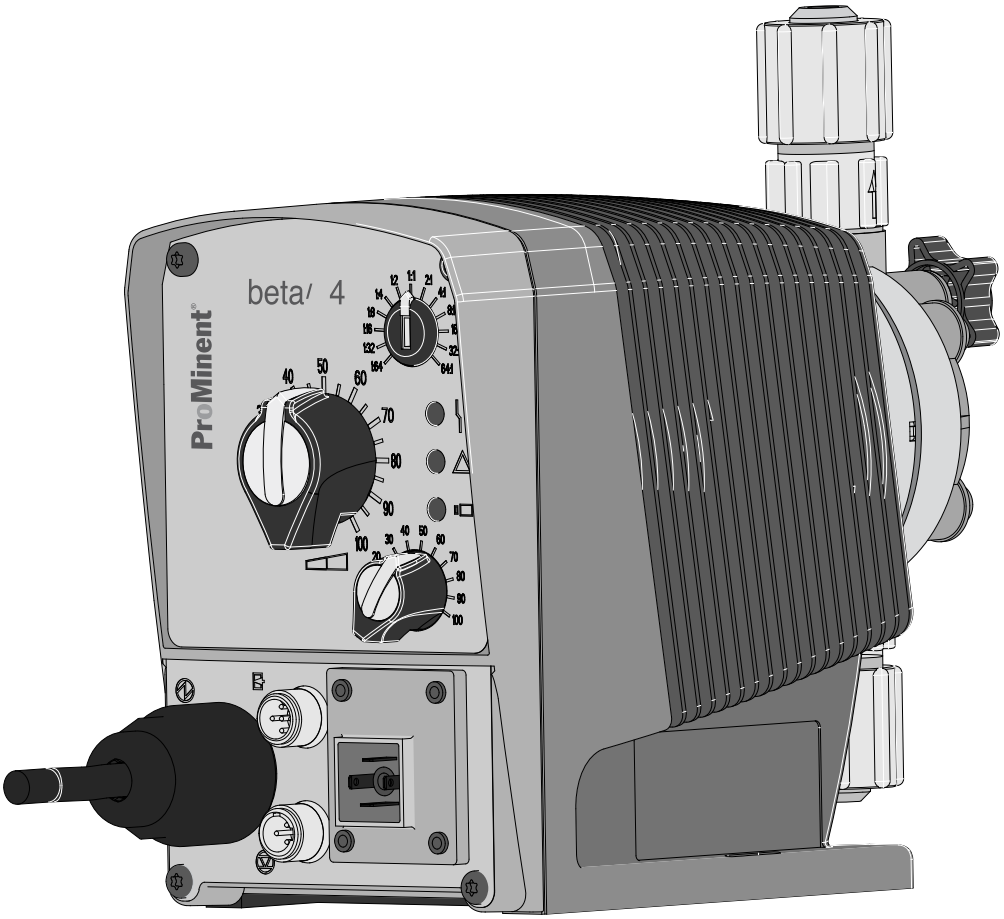

Please carefully read these operating instructions before use. · Do not discard.
The operator shall be liable for any damage caused by installation or operating errors.
The latest version of the operating instructions are available on our homepage.

Supplementary information

Fig. 1: Please read!

Read the following supplementary information in its entirety! You will benefit more from using the operating instructions should you already know this information.

The following are highlighted separately in the document:

- Enumerated lists

→ Instructions

⇨ Outcome of the instructions

↳ *„State the identity code and serial number“ on page 2*: Links to points in this chapter

- refer to ... : References to points in this document or another document

[Keys]

Information

This provides important information relating to the correct operation of the unit or is intended to make your work easier.

Safety Information

Safety information is identified by pictograms - see Safety Chapter.

Validity

These operating instructions conform to current EU regulations applicable at the time of publication.

State the identity code and serial number

Please state identity code and serial number, which you can find on the nameplate when you contact us or order spare parts. This enables us to clearly identify the unit type and material versions.

Table of contents

1 Identity code 5

2 About this pump 7

3 Safety Chapter 8

4 Storage, Transport and Unpacking 13

5 Overview of Equipment and Control Elements 14

5.1 Overview of Equipment 14

5.2 Control Elements 15

5.2.1 Pulse control switch 15

5.2.2 Stroke Length Adjustment Button 15

5.2.3 Multifunctional Switch 15

5.2.4 Functional and Fault Indicators 16

5.2.5 "External control" terminal 16

5.2.6 "Level switch" terminal 16

6 Functional description 17

6.1 Liquid End 17

6.2 Drive Unit 17

6.3 Capacity 17

6.4 Self-Bleeding 17

6.5 Operating modes 17

6.6 Functions 18

6.7 Relay 18

6.8 Hierarchy of Operating Modes, Functions and Fault Statuses 18

7 Assembly 19

8 Installation, hydraulic 20

8.1 Installing hose lines 21

8.1.1 Installation of metering pumps without bleed valve 21

8.1.2 Installation of metering pumps with bleed valve 23

8.1.3 Installation of metering pumps with self-bleeding (SEK type) 24

8.1.4 Basic installation notes 25

9 Electrical installation 27

9.1 Supply voltage connector 28

9.1.1 Mains voltage 28

9.2 Supply voltage connector - low voltage 29

9.3 Description of the Terminals 29

9.3.1 "External control" terminal 29

9.3.2 "Level switch" terminal 31

9.4 Relay 31

9.4.1 Relay functions 31

9.4.2 "Fault indicating relay" output (identity code 1 + 3) 32

9.4.3 "Fault indicating relay" + "Pacing relay" output (identity code 4 + 5) 33

10 Start up 34

11 Operation 37

11.1 Manual 37

11.1.1 Capacity 37

11.1.2 Functions 37

11.1.3 External contact 38

11.1.4 External analog 39

11.2 Remote operation 39

12 Maintenance 40

13 Repairs ... 42
13.1 Cleaning valves ... 43
13.2 Replacing the diaphragm ... 45
14 Troubleshooting ... 48
14.1 Faults without a fault message ... 48
14.2 Fault messages ... 49
14.3 Warning messages ... 49
14.4 All other faults ... 49
15 Decommissioning ... 50
16 Technical data ... 52
16.1 Performance data ... 52
16.2 Accuracy ... 54
16.2.1 Standard Liquid End ... 54
16.2.2 Self-Bleeding Liquid End ... 54
16.3 Viscosity ... 54
16.4 Material specifications ... 55
16.5 Electrical data ... 55
16.6 Temperatures ... 57
16.7 Climate ... 57
16.8 Degree of Protection and Safety Requirements ... 58
16.9 Compatibility ... 58
16.10 Sound pressure level ... 58
16.11 Shipping weight ... 58
17 Dimensional drawings ... 59
18 Diagrams for setting the capacity ... 65
19 Exploded drawings and ordering information ... 71
19.1 Exploded drawings ... 71
19.2 Ordering information ... 116
20 Declaration of Conformity for Machinery, Mains Voltage ... 117
21 Declaration of Conformity for Machinery, Low Voltage ... 118
22 Approvals ... 119
23 Index ... 120

1 Identity code

Product range Beta b						
BT4b	**Type**	**Capacity**				
		bar	**l/h**			
	1000	10	0.74			
	1601	16	1.10			
	1602	16	2.20			
	1604	16	3.60			
	0708	7	7.10			
	0413	4	12.30			
	0220	2	19.00			
BT5b						
	2504	25	2.90			
	1008	10	6.80			
	0713	7	11.00			
	0420	4	17.10			
	0232	2	32.00			
		Material of dosing head/valves				
		PP	Polypropylene/PVDF. With the self-bleeding design (SEK): polypropylene/polypropylene			
		NP	Clear acrylic/PVDF. With the self-bleeding design (SEK): Clear acrylic/PVC			
		PV	PVDF/PVDF			
		TT	PTFE + 25 % carbon /PTFE + 25 %			
		SS	Stainless steel 1.4401/1.4571			
			Material of seals/diaphragm			
			T	PTFE/PTFE-coated		
			E	EPDM/PTFE-coated, only for PP and NP self-bleeding (SEK)		
			B	FPM-B/PTFE-coated, only for PP and NP self-bleeding (SEK)		
			S	Diaphragm with additional FPM coating for media containing silicate		
			F	FDA-compliant		
				Dosing head design		
				0	without bleed valve, without valve spring only for NP, TT, SS and type 0232	
				1	without bleed valve, with valve spring only for NP, TT, SS and type 0232	
				2	with bleed valve, without valve spring only for PP, PV, NP not for type 0232	
				3	with bleed valve, with valve spring only for PP, PV, NP not for type 0232	
				4	design for higher-viscosity media only for PVT, type 1604, 2504, 0708, 1008, 0413, 0713, 0220, 0420	
				7	self-bleeding (SER) only for PV/NP, not for types 1000, 1601 and 0232	
				9	self-bleeding (SEK) only for PP/NP, not for types 1000 and 0232	
					Hydraulic connector	
					0	Standard connection in line with technical data
					5	Connector for 12/6 hose, discharge side only

Product range Beta b																
					9	Connector for 10/4 hose, discharge side only										
						Design										
						0	Standard									
							Logo									
							0	with ProMinent logo								
								Electrical connection								
								U	100 ... 230 V ± 10%, 50/60 Hz*							
									Cable and plug							
									A	2 m European						
									B	2 m Swiss						
									C	2 m Australian						
									D	2 m USA						
									1	2 m open end						
										Relay						
										0	no relay					
										1	fault indicating relay (NC) (change-over relay)					
										3	fault indicating relay (NO) (change-over relay)					
										4	as 1 + pacing relay, (ONE each)					
										5	as 3 + pacing relay, (ONE each)					
											Accessories					
											0	no accessories				
											1	with foot and injection valve, 2 m PVC suction line, 5 m metering line				
												Control type				
												0	no lock			
												1	with lock: manual operation locked when external cable plugged in			
												H	External without PCS stop			
													Control version			
													0	Standard		
													A	External analogue 0...20 mA / 4...20 mA		
														Options		
														00	no options	

2 About this pump

Properties of the device

This solenoid metering pump Beta b is equipped with all adjustment and activation functions for modern water treatment and the dosing of chemicals. It has pulse step-up and pulse step-down compared with the preceding model. This enables it to adapt more precisely to external signal generators. The result is the simpler and more precise adjustment of chemical consumption to the actual need. It also has a 10 percent increase in efficiency and energy efficiency over the preceding model. The Beta b can be simply adjusted during operation.

3 Safety Chapter

Identification of safety notes

The following signal words are used in these operating instructions to denote different severities of danger:

Signal word	Meaning
WARNING	Denotes a possibly dangerous situation. If this is disregarded, you are in a life-threatening situation and this can result in serious injuries.
CAUTION	Denotes a possibly dangerous situation. If this is disregarded, it could result in slight or minor injuries or material damage.

Warning signs denoting different types of danger

The following warning signs are used in these operating instructions to denote different types of danger:

Warning signs	Type of danger
	Warning – automatic start-up.
	Warning – high-voltage.
	Warning – danger zone.

Intended Use

- Only use the pump to meter liquid feed chemicals.
- Only use the pump after it has been correctly installed and started up in accordance with the technical data and specifications contained in the operating instructions.
- Observe the general limitations with regard to viscosity limits, chemical resistance and density - see also ProMinent resistance list in the Product Catalogue or at www.prominent.com!
- All other uses or modifications are prohibited.
- The pump is not intended for the metering of gaseous media and solids.
- The pump is not intended for the metering of flammable media without implementing suitable protective measures.
- The pump is not intended for the metering of explosive media.
- The pump is not intended for operation in areas at risk from explosion.
- The pump is not intended for exterior applications without the implementation of suitable protective measures.
- The pump should only be operated by trained and authorised personnel, see the following "Qualifications" table.
- You are obliged to observe the information contained in the operating instructions at the different phases of the unit's service life.

Safety information

WARNING!

Warning about personal and material damage

The pump can start to pump, as soon as it is connected to the mains voltage.

– Install an emergency cut-off switch in the pump power supply line or integrate the pump in the emergency cut-off management of the system.

WARNING!

Danger of electric shock

A mains voltage may exist inside the pump housing.

– If the pump housing has been damaged, you must disconnect it from the mains immediately. It may only be returned to service after an authorised repair.

WARNING!

Warning of hazardous feed chemical

Should a dangerous feed chemical be used: it may escape from the hydraulic components when working on the pump, material failure or incorrect handling of the pump.

– Take appropriate protective measures before working on the pump (e.g. safety glasses, safety gloves, ...). Adhere to the material safety data sheet for the feed chemical.
– Drain and flush the liquid end before working on the pump.

WARNING!

Fire danger

When pumping inflammable media the operator must take suitable safety precautions.

WARNING!

Danger from hazardous substances!

Possible consequence: Fatal or very serious injuries.

Please ensure when handling hazardous substances that you have read the latest safety data sheets provided by the manufacture of the hazardous substance. The actions required are described in the safety data sheet. Check the safety data sheet regularly and replace, if necessary, as the hazard potential of a substance can be re-evaluated at any time based on new findings.

The system operator is responsible for ensuring that these safety data sheets are available and that they are kept up to date, as well as for producing an associated hazard assessment for the workstations affected.

CAUTION!

Warning of feed chemical spraying around

Feed chemical can spray out of the hydraulic components if they are manipulated or opened due to pressure in the liquid end and adjacent parts of the system.

– Disconnect the pump from the mains power supply and ensure that it cannot be switched on again by unauthorised persons.
– Depressurise the system before commencing any work on hydraulic parts.

CAUTION!

Warning of feed chemical spraying around

The metering pump can generate a multiple of its rated pressure. Hydraulic parts can rupture if a discharge line is blocked.

– Correctly install a relief valve in the discharge line downstream of the metering pump.

CAUTION!

Warning of feed chemical spraying around

An unsuitable feed chemical can damage the parts of the pump that come into contact with the chemical.

– Take into account the resistance of the wetted materials and the ProMinent Resistance List when selecting the feed chemical - see the ProMinent Product Catalogue or visit ProMinent.

CAUTION!

Danger of injury to personnel and material damage

The use of untested third party components can result in injury to personnel and material damage.

– Only fit parts to metering pumps that have been tested and recommended by ProMinent.

CAUTION!

Danger from incorrectly operated or inadequately maintained pumps

Danger can arise from a poorly accessible pump due to incorrect operation and poor maintenance.

– Ensure that the pump is accessible at all times.
– Adhere to the maintenance intervals.

CAUTION!

Danger from incorrect metering

Should a different liquid end size be fitted, this will change the metering behaviour of the pump.

– Have the pump reprogrammed in the works.

CAUTION!

Warning against illegal operation

Observe the regulations that apply where the device is installed.

Fixed separating protective equipment

- Dosing head
- Housing
- Hood (houses the control elements)

The dosing head may only be removed by the customer in accordance with the "Repair" chapter.

The housing and the hood may only be removed by ProMinent customer service department.

Information in the event of an emergency

In an emergency, either pull out the mains plug, turn the multifunctional switch to "Stop" or press the Emergency Stop switch installed on the customer's side or disconnect the pump from the mains power supply in line with the emergency shut-down management guidelines for your system!

If feed chemical escapes, additionally ensure that the hydraulic system around the pump is at atmospheric pressure. Adhere to the safety data sheet for the feed chemical.

Qualification of personnel

Task	Qualification
Storage, transport, unpacking	Instructed person
Assembly	Technical personnel, service
Planning the hydraulic installation	Qualified personnel who have a thorough knowledge of metering pumps
Hydraulic installation	Technical personnel, service
Installation, electrical	Electrical technician
Operation	Instructed person
Maintenance, repair	Technical personnel, service
Decommissioning, disposal	Technical personnel, service
Troubleshooting	Technical personnel, electrical technician, instructed person, service

Explanation of the table:

Qualified personnel

A qualified employee is deemed to be a person who is able to assess the tasks assigned to him and recognise possible dangers based on his/her technical training, knowledge and experience, as well as knowledge of pertinent regulations.

Note:

A qualification of equal validity to a technical qualification can also be gained by several years of employment in the relevant field of work.

Electrical technician

An electrical technician is able to complete work on electrical systems and recognise and avoid possible dangers independently based on his/her technical training and experience, as well as knowledge of pertinent standards and regulations.

The electrical technician should be specifically trained for the working environment in which he is employed and know the relevant standards and regulations.

An electrical technician must comply with the provisions of the applicable statutory directives on accident prevention.

Instructed person

An instructed person is deemed to be a person who has been instructed and, if required, trained in the tasks assigned to him/her and possible dangers that could result from improper behaviour, as well as having been instructed in the required protective equipment and protective measures.

Service

The Service department refers to service technicians, who have received proven training and have been authorised by ProMinent to work on the system.

Sound pressure level

Sound pressure level LpA < 70 dB according to EN ISO 20361

at maximum stroke length, maximum stroke rate, maximum back pressure (water)

4 Storage, Transport and Unpacking

Safety Information

WARNING!

The transporting of pumps which have been used with radioactive feed chemicals is forbidden!

They will also not be accepted by ProMinent!

WARNING!

Only return metering pumps for repair in a cleaned state and with a flushed liquid end - refer to "Decommissioning!

Only return metering pumps with a completed Decontamination Declaration form. The Decontamination Declaration constitutes an integral part of an inspection / repair order. A unit can only be inspected or repaired when a Declaration of Decontamination Form is submitted that has been completed correctly and in full by an authorised and qualified person on behalf of the pump operator.

The "Decontamination Declaration Form" can be found on our homepage.

CAUTION!

Danger of material damage

The device can be damaged by incorrect or improper storage or transportation!

- The unit should only be stored or transported in a well packaged state - preferably in its original packaging.
- The packaged unit should also only be stored or transported in accordance with the stipulated storage conditions.
- The packaged unit should be protected from moisture and the ingress of chemicals.

Ambient conditions

Data	Value	Unit
Minimum storage and transport temperature	-20	°C
Maximum storage and transport temperature	+60	°C
Maximum air humidity *	95	% rel. humidity

* non-condensing

Scope of delivery

Compare the delivery note with the scope of delivery:

- Metering pump with mains cable
- Connector kit for hose/pipe connection (optional)
- Product-specific operating instructions with EC Declaration of Conformity
- Optional accessories

5 Overview of Equipment and Control Elements

5.1 Overview of Equipment

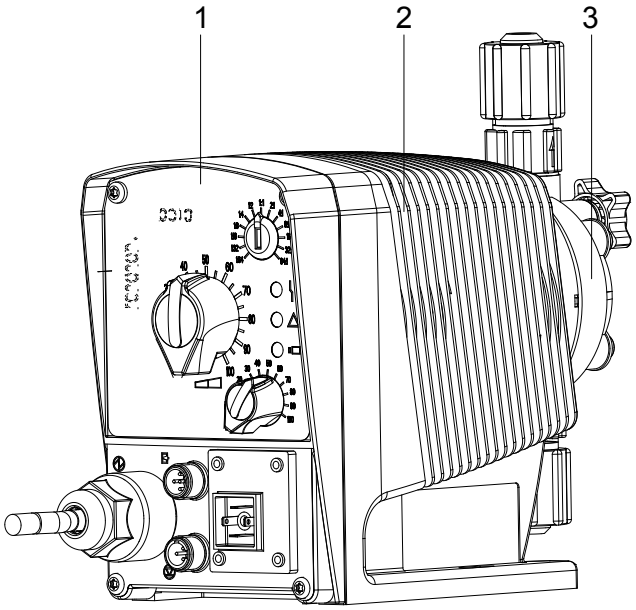

Fig. 2: Complete overview

1 Control unit
2 Drive unit
3 Liquid end

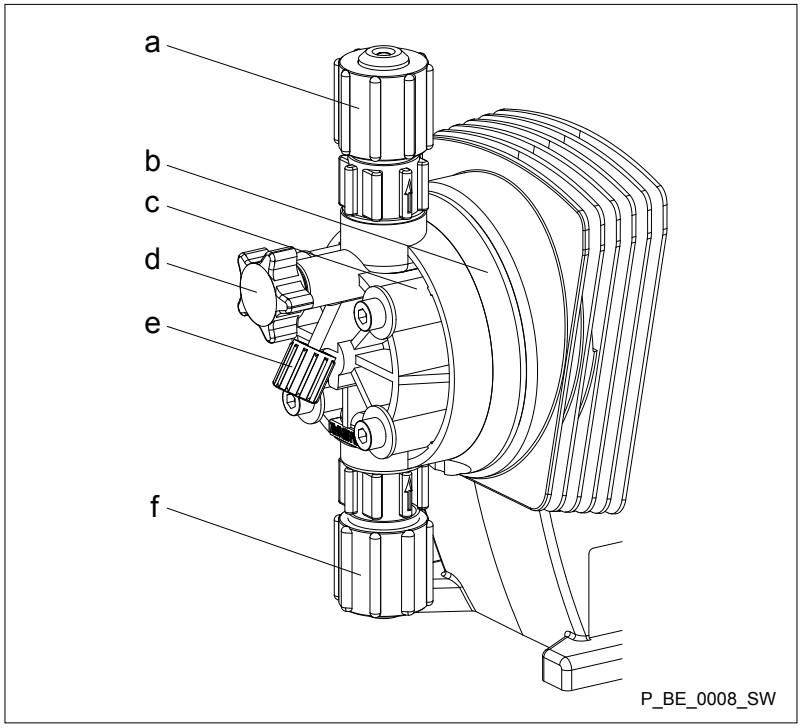

Fig. 3: Overview of liquid end (PV)

a Discharge valve
b Backplate
c Dosing head
d Bleed valve
e Bypass hose sleeve
f Suction valve

5.2 Control Elements

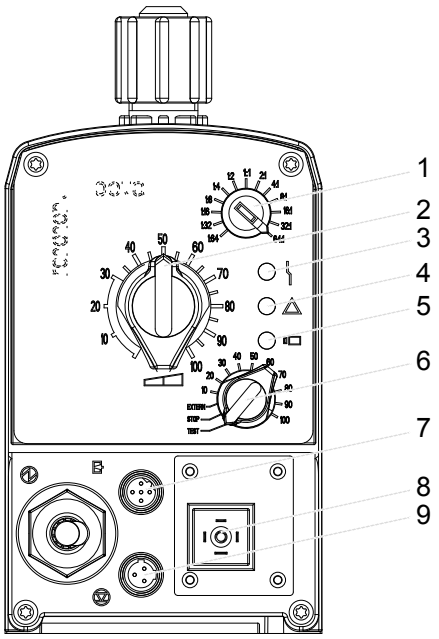

Fig. 4

1 Pulse control switch
2 Stroke Length Adjustment Button
3 Fault indicator (red)
4 Warning indicator (yellow)
5 Operating indicator (green)
6 Multifunctional Switch
7 "External control" terminal
8 Relay connection (optional)
9 "Level switch" terminal

5.2.1 Pulse control switch

In **"External Contact" operating mode**, the pulse control switch either triggers a series of strokes or steps down an incoming series of contacts by a single contact (at the "external control" terminal).

In **"External Analogue" operating mode**, the stroke rate can be controlled by an mA signal via the pulse control switch. To do so, the multifunctional switch has to be turned to "Extern".

5.2.2 Stroke Length Adjustment Button

The stroke length adjustment button can be used to adjust the stroke length.

5.2.3 Multifunctional Switch

The multifunctional switch can be used to set the following functions, operating modes and stroke rate.

The operating modes that can be set are:

- Test (priming function)
- Stop (optionally missing)
- Extern (Contact)
- External (analogue, optional)
- Manual (setting stroke rate in 10% increments)

5.2.4 Functional and Fault Indicators

Fault indicator (red)

The fault indicator lights up if the fluid level in the dosing tank falls below the second switching point of the level switch (20 mm residual filling level in the dosing tank).

The fault indicator lights up if the current falls below 3.8 mA (only with 4...20 mA) or exceeds 23 mA in "External Analogue" operating mode.

This LED flashes in the event of an undefined operating status.

Warning indicator (yellow)

The warning indicator lights up if the fluid level in the dosing tank falls below the first switching point of the level switch.

Operating indicator (green)

The operating indicator lights up if the pump is ready for operation and there are no fault or warning alerts. It goes out quickly as soon as the pump has performed a stroke.

5.2.5 "External control" terminal

The "external control" terminal is a five-pole panel terminal.

It enables the following functions and operating modes to be used:

- Pause
- External contact
- External Analogue (optional)
- Auxiliary frequency (external frequency changer)

The two- and four-pole cables used to date can continue to be used. The "Auxiliary frequency" function can, however, only be used with a five-pole cable.

5.2.6 "Level switch" terminal

A 2-stage level switch with pre-warning and end switch-off can be connected.

6 Functional description

6.1 Liquid End

The dosing process is performed as follows: The diaphragm is pressed into the dosing head; the pressure in the dosing head closes the suction valve and the feed chemical flows through the discharge valve out of the dosing head. The diaphragm is now drawn out of the dosing head; the discharge valve closes due to the negative pressure in the dosing head and fresh feed chemical flows through the suction valve into the dosing head. One cycle is completed.

6.2 Drive Unit

The diaphragm is driven by an electromagnet, which is controlled by an electronic controller.

6.3 Capacity

The capacity is determined by the stroke length and the stroke rate.

The stroke length is adjusted by the stroke length adjustment knob within a range of 0 ... 100 %. A stroke length of between 30 ... 100 % (SEK type: 50 ... 100 %) is recommended to achieve the specified reproducibility!

Data	Value	Unit
Recommended stroke length, standard type	30 ... 100	%
Recommended stroke length, SEK type	50 ... 100	%

The stroke rate can be set within a range of 10 ... 100 % using the multifunctional switch.

6.4 Self-Bleeding

Self-bleeding liquid ends (SEK types) are capable of independent priming when a discharge line is connected and diverting existent air pockets via a bypass. During operation they are also capable of conveying away gases which are produced, independently of the operating pressure in the system. It is also possible to dose precisely in a depressurised state due to the integral back pressure valve.

6.5 Operating modes

The operating modes are selected by means of the multifunctional switch.

"Manual" operating mode

As soon as the stroke rate has been set by the multifunctional switch, the pump finds itself in "Manual" operating mode. 100% corresponds to 180 strokes/min.

"External contact" operating mode

The "External Contact" operating mode is described below in the "Operation" and "Installation, Electrical" chapters.

"External Analogue" operating mode

The "External Analogue" operating mode is described below in the "Operation" and "Installation, Electrical" chapters.

6.6 Functions

The functions are described below in the "Operation" chapter.

6.7 Relay

The pump has two connecting options.

Fault indicating relay option

The relay can switch a connected power circuit (e.g. for an alarm horn) in the event of warnings or fault messages (e.g. warning levels).

The relay can be retrofitted with the retrofit kit via a knock-out opening in the pump foot - refer to "Retrofitting relays".

Fault indicating and pacing relay option

This combined relay can generate a contact with each stroke via its pacing relay in addition to its function as a fault indicating relay.

The relay can be retrofitted with the retrofit kit via a knock-out opening in the pump foot - refer to "Retrofitting relays".

6.8 Hierarchy of Operating Modes, Functions and Fault Statuses

The different operating modes, functions and fault statuses have a different effect on if and how the pump reacts.

The following list shows the order:

1. - Test (priming)
2. - Fault, Stop, Pause
3. - Auxiliary frequency (external frequency changeover)
4. - Manual, Extern Contact

Comments:

re 1 - "Priming" can take place in any mode of the pump (providing it is functioning).

re 2 - "Fault", "Stop" und "Pause" stop everything apart from "Priming".

re 3 - The stroke rate of "Auxiliary frequency" always has priority over the stroke rate specified by an operating mode in 4.

7 Assembly

– *Compare the dimensions on the dimension sheet with those of the pump.*

WARNING!

Danger of electric shock

If water or other electrically conducting liquids penetrate into the drive housing, in any other manner than via the pump's suction connection, an electric shock may occur.

– Position the pump so that it cannot be flooded.

CAUTION!

Danger from incorrectly operated or inadequately maintained pumps

Danger can arise from a poorly accessible pump due to incorrect operation and poor maintenance.

– Ensure that the pump is accessible at all times.
– Adhere to the maintenance intervals.

Capacity too low

The liquid end valves can be disturbed by vibrations.

– *Secure the metering pump so that no vibrations can occur.*

Capacity too low

If the valves of the liquid end are not vertical, they cannot close correctly.

– *Suction and discharge valves must stand vertically upwards (for self-bleeding liquid end, the bleed valve).*

→ Mount the metering pump with the pump foot on a horizontal, level and load-bearing supporting surface.

8 Installation, hydraulic

Safety information

CAUTION!

Warning of feed chemical spraying around

An unsuitable feed chemical can damage the parts of the pump that come into contact with the chemical.

– Take into account the resistance of the wetted materials and the ProMinent Resistance List when selecting the feed chemical - see the ProMinent Product Catalogue or visit ProMinent.

CAUTION!

FDA pumps only: problems with hygiene possible

The O-rings supplied can become slightly contaminated through packaging and shipment.

– Thoroughly clean the O-rings supplied before use.

CAUTION!

Warning of feed chemical spraying around

Pumps which are not fully installed hydraulically can pump feed chemical from the outlet opening of the discharge valve as soon as they are connected to the mains/power supply.

– First install the pump hydraulically, then electrically.
– In the event that you have failed to do so, turn the multifunctional switch to *[Stop]* (if fitted) or press an On / Off switch or Emergency Stop switch on site.

CAUTION!

Warning of feed chemical spraying around

Feed chemical can spray out of the hydraulic components if they are manipulated or opened due to pressure in the liquid end and adjacent parts of the system.

– Disconnect the pump from the mains power supply and ensure that it cannot be switched on again by unauthorised persons.
– Depressurise the system before commencing any work on hydraulic parts.

CAUTION!

Danger from rupturing hydraulic components

Peak loads during the dosing stroke can cause the maximum permissible operating pressure of the system and pump to be exceeded.

– The discharge lines are to be properly designed.

CAUTION!

Danger of personnel injury and material damage

The use of untested third party parts can result in personnel injuries and material damage.

– Only fit parts to metering pumps, which have been tested and recommended by ProMinent.

8.1 Installing hose lines

8.1.1 Installation of metering pumps without bleed valve

Safety information

CAUTION!

Warning of feed chemical spraying around

The pipes can loosen or rupture if they are not installed correctly.

- Route all hose lines so they are free from mechanical stresses and kinks.
- Only use original hoses with the specified hose dimensions and wall thicknesses.
- Only use clamp rings and hose nozzles that are intended for the hose diameter in question to ensure the long service life of the connections.

CAUTION!

Danger from rupturing hydraulic components

Hydraulic components can rupture if the maximum permissible operating pressure is exceeded.

- Always adhere to the maximum permissible operating pressure of all hydraulic components - please refer to the product-specific operating instructions and system documentation.
- Never allow the metering pump to run against a closed shut-off device.
- Install a relief valve.

CAUTION!

Hazardous feed chemicals can escape

Hazardous or extremely aggressive feed chemicals can leak out when using conventional bleeding procedures with metering pumps.

- Install a bleed line with return line into the storage tank.

CAUTION!

Hazardous feed chemicals can escape

Hazardous or extremely aggressive feed chemicals can leak out in the event that the metering pump is removed from the installation.

- Install a shut-off valve on the pressure and discharge side of the metering pump.

CAUTION!

Uncontrolled flow of feed chemical

Feed chemical can press through a stopped metering pump if there is back pressure.

- Use an injection valve or a vacuum breaker.

CAUTION!

Uncontrolled flow of feed chemical

Feed chemicals can leak through the metering pump in an uncontrolled manner in the event of excessive priming pressure.

– Do not exceed the maximum permissible priming pressure for the metering pump.

Align the pipes so that the metering pump and the liquid end can be removed from the side if necessary.

Installing hose lines - PP, NP, PV, TT designs

1. Cut off the ends of the hoses at right angles.
2. Pull the union nut (2) and clamp ring (3) over the hose (1) - see Fig. 5.
3. Push the hose end (1) up to the stop over the nozzle (4) and widen, if necessary.

Ensure that the O-ring and/or the flat seal (5) is sitting properly in the valve (6).

Never re-use used PTFE seals. An installation sealed in this way is not watertight.

This type of seal is permanently distorted when subjected to pressure.

The FPM flat seal PV design has a dot to enable it to be distinguished from the EPDM flat seal.

4. Place the hose (1) with the nozzle (4) onto the valve (6).
5. Clamp the hose connector: Tighten the union nut (2) while simultaneously pressing on the hose (1).
6. Re-tighten the hose connector: Pull on the hose (1) briefly, which is fastened to the dosing head and then tighten the union nut (2) once more.

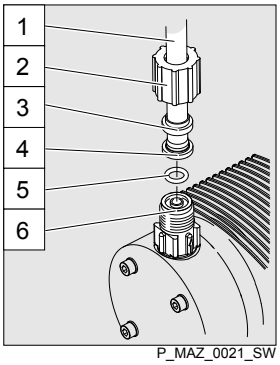

1 Hose
2 Union nut
3 Clamp ring
4 Nozzle
5 O-ring or flat seal
6 Valve

Fig. 5: PP, NP, PV and TT designs

Installing stainless steel pipe - SS design

1. Pull the union nut (2) and clamp rings (3, 4) over the pipe (1) with approx. 10 mm overhang - see *„Installing stainless steel pipe - SS design“ on page 23*.
2. Insert the pipe (1) up to the stop in the valve (5) and then withdraw 1...2 mm.
3. Tighten the union nut (2).

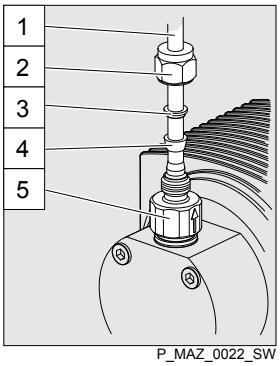

1 Pipe
2 Union nut
3 Rear clamp ring
4 Front clamp ring
5 Valve

Fig. 6: SS design

Installing hose lines - SS design

CAUTION!
Warning of feed chemical spraying around
Connections can come loose in the event that hose lines are installed incorrectly on stainless steel valves.

– Only use PE or PTFE hose lines.
– In addition, insert a stainless steel support insert into the hose line.

8.1.2 Installation of metering pumps with bleed valve

Safety information

CAUTION!
– All the installation and safety information for metering pumps without bleed valves also apply.

Installation of the return line

A return line is also connected in addition to the suction and discharge line.

1. Attach the hose line to the return hose nozzle or to the liquid end bleed valve. PVC hose, soft, 6x4 mm is recommended.
2. Feed the free end of the return line into the storage tank.
3. Shorten the return line so that it is not immersed in the feed chemical in the storage tank.

8.1.3 Installation of metering pumps with self-bleeding (SEK type)

Safety information

CAUTION!
- All the installation and safety information for metering pumps without self-bleeding also apply.
- Do not exceed the maximum values for priming lift, priming pressure and viscosity of the feed chemical.
- Do not allow the suction side line cross-section to exceed the line cross-section on the suction valve.

Information about priming pressure
- *Make sure that the priming pressure on the suction end is at least equal to the return line pressure.*
- *Priming pressure in the return line restricts the bleeding function.*
- *However, operation with priming pressure in the return line and the suction end at atmospheric pressure is possible.*

Installation of the return line

A return line is also connected in addition to the suction and discharge line.

- *The return line is connected to the vertical valve on the upper side of the liquid end. It is factory-labelled with a red sleeve - see „Installation of the return line“ on page 24.*
- *The discharge line is connected to the horizontal valve.*

1. Attach the hose line to the return hose nozzle or to the liquid end bleed valve. PVC hose, soft, 6x4 mm is recommended.
2. Feed the free end of the return line into the storage tank.
3. SEK only: Insert the return line into the anti-kink device on the bleed valve and screw it in place until the anti-kink device engages.

The anti-kink device prevents the return line from kinking, avoiding the risk of self-bleeding failure.

4. Shorten the return line so that it is not immersed in the feed chemical in the storage tank.

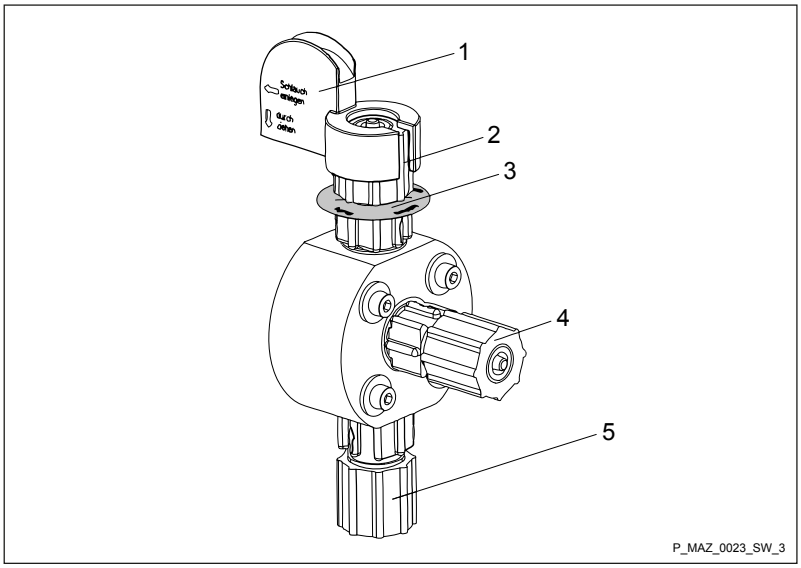

Fig. 7: SEK liquid end

1 Anti-kink device
2 Bleed valve for the return line into the storage tank, 6/4 mm
3 Red sleeve
4 Discharge valve for discharge line to the injection point, 6/4 - 12/9 mm
5 Suction valve for suction line in the storage tank, 6/4 - 12/9 mm

8.1.4 Basic installation notes

Safety notes

CAUTION!

Danger resulting from rupturing hydraulic components

Hydraulic components can rupture if the maximum permissible operating pressure is exceeded.

– Never allow the metering pump to run against a closed shut-off device.
– With metering pumps without integral relief valve: Install a relief valve in the discharge line.

CAUTION!

Hazardous feed chemicals can escape

With hazardous feed chemicals: Hazardous feed chemical can leak out when using conventional bleeding procedures with metering pumps.

– Install a bleed line with a return into the storage tank.

→ Shorten the return line so that it does not dip into the feed chemical in the storage tank.

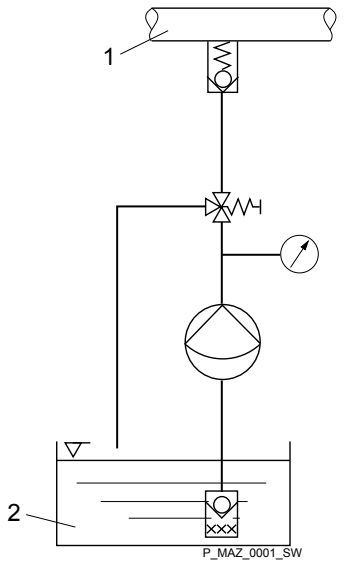

Fig. 8: Standard installation

1 Main line
2 Storage tank

Legend for hydraulic diagram

Symbol	Explanation	Symbol	Explanation
	Metering pump		Foot valve with filter meshes
	Injection valve		Level switch
	Multifunctional valve		Manometer

9 Electrical installation

WARNING!

Danger of electric shock

A mains voltage may exist inside the device.

– Before any work, disconnect the device's mains cable from the mains.

WARNING!

Risk of electric shock

This pump is supplied with a grounding conductor and a grounding-type attachment plug.

– To reduce the risk of electric shock, ensure that it is connected only to a proper grounding-type receptacle.

WARNING!

Risk of electric shock

In the event of an electrical accident, the pump must be quickly disconnected from the mains.

– Install an emergency cut-off switch in the pump power supply line or
– Integrate the pump in the emergency cut-off management of the system and inform personnel of the isolating option.

WARNING!

Danger of electric shock

A mains voltage may exist inside the pump housing.

– If the pump housing has been damaged, you must disconnect it from the mains immediately. It may only be returned to service after an authorised repair.

CAUTION!

Material damage possible due to power surges

Should the pump be connected to the mains power supply in parallel to inductive consumers (such as solenoid valves, motors), inductive power surges can damage the control when it is switched off.

– Provide the pump with its own contacts (Phase) and supply with voltage via a contactor relay or relay.
– Should this not be possible, then switch a varistor (part no. 710912) or an RC gate (0.22 µF/220 Ω, part no. 710802) in parallel.

CAUTION!

Bonding of the contacts of your switching relay

The high starting current can cause the contacts of the on-site switching relay to bond together if the mains voltage switches a solenoid metering pump on and off in a process.

– Use the switching options offered by the external socket to control the pump (functions: Pause, Auxiliary frequency or Operating modes: Contact, Batch, Analogue).
– Use a starting current limiter if it is impossible to avoid switching the pump on and off via a relay.

Personnel: ■ Electrician

→ Install the pump in line with best working practice and in accordance with the operating instructions and applicable regulations.

9.1 Supply voltage connector

WARNING!

Unexpected startup is possible

As soon as the pump is connected to the mains, the pump may start pumping and consequently feed chemical may escape.

– Prevent dangerous feed chemicals from escaping.
– If you have not successfully prevented this, immediately press the *[STOP/START]* key or disconnect the pump from mains, e.g. via an emergency cu-off switch.

CAUTION!

If the pump is integrated into a system: Design the system so that potential hazardous situations are avoided by pumps starting up automatically subsequent to unintended power interruptions.

CAUTION!

Provide an option to disconnect the pump from the mains/power supply without Emergency Stop switch.

9.1.1 Mains voltage

Parallel connection to inductive consumers

Should the pump be connected to the mains in parallel to inductive consumers (e.g. solenoid valves, motor), the pump must be electrically isolated when these consumers are switched off.

■ Supply the pumps with voltage via a contactor relay or relay using separate contacts for the pump.
■ If this is not possible then connect a varistor (part no. 710912) or an RC member, 0.22 µF / 220 Ω in parallel.

Interference suppression aids

Product	Part no.
Varistor:	710912
RC Gate, 0.22 µF / 220 Ω:	710802

9.2 Supply voltage connector - low voltage

WARNING!

Danger of electric shock

– For safety reasons, the low voltage pumps must be operated using only protective low voltage (SELV in accordance with EN 60335-1).

CAUTION!

Supply voltages that are too high destroy the pump.

– Do not connect the low voltage pump to voltages of > 30 V.

– *The pump will generate a fault ("switch-off threshold for supply") in the event that the supply voltage to the pump is insufficient to ensure reliable function. The pump will recommence operation as soon as the supply voltage is restored.*
– *The fault indicator flashes additionally if the supply voltage is interrupted during a stroke, ("threshold for stroke abort"). Aborted strokes are not counted by the stroke counter. In doing so, the pump's electronic controller periodically checks the supply voltage ("wait time after stroke abort": 10 min). The pump will recommence operation if the supply voltage is sufficient.*
– *The pump's electrical system will shut down completely in the event that the supply voltage undershoots another threshold. The pump will come out of standby mode and recommence operation as soon as sufficient supply voltage is restored.*
– *The programmed thresholds apply to standard lead-acid batteries. ProMinent can adapt them to customer requirements.*
– *Use short large-diameter power leads to minimise faults. Use batteries with low internal resistance.*
– *If the pump is connected with incorrect polarity, it will not run because the polarity protection does not allow any current to flow.*

9.3 Description of the Terminals

9.3.1 "External control" terminal

The "external control" socket is a five-pin panel socket. It is compatible with two- and four-pole cables.

The "Auxiliary rate" function can only be used with a five conductor cable.

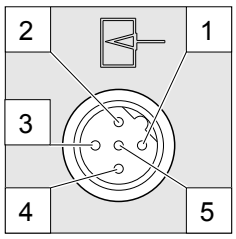

Fig. 9: Pump assignment

Electrical interface for pin 1 "Pause" - pin 2 "External contact" - pin 5 "Auxiliary frequency"

Data	Value	Unit
Voltage with open contacts	5	V
Input resistance	10	kΩ
Max. pulse frequency	25	pulse/s
Min. pulse duration	20	ms
Min. pause between pulses	3	ms

Control via:

- potential-free contact (load: 0.5 mA at 5 V) or
- Semiconductor switch (residual voltage < 0.7 V)

Electrical interface for pin 3 "mA input" (with identity code characteristic "Control version": A - "External Analogue")

Data	Value	Unit
Input apparent ohmic resistance, approx.	120	Ω

Tab. 1: Behaviour of the pump

At **approx. 0.1 mA (4.1 mA)** the metering pump makes its **first metering stroke**.
At **approx. 19.9 mA** the pump moves to continuous operation at **180 strokes / min** .
With current signals **above 23 mA**, the red fault indicator lights up, the pump stops and any fault indicating relay fitted switches (a **fault** is pending).
Only with 4...20 mA: With current signals **below 3.8 mA**, the red fault indicator lights up, the pump stops and any fault indicating relay fitted switches (**Fault** for example with a cable break).

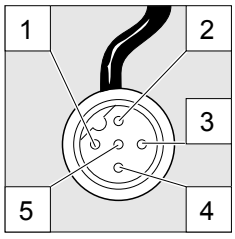

Fig. 10: Cable assignment

Pin	Function	5-wire cable	2-wire cable
1	Pause	brown	bridged at pin 4
2	External contact	white	brown
3	mA input*	blue	-
4	Earth GND	black	white
5	Auxiliary frequency	grey	-

* with identity code characteristic "Control version": A - "External Analogue"

Refer to the functional description for the hierarchy of functions and operating modes.

"Pause" function

The pump does not work if:

- the cable is connected and pin 1 and pin 4 are open.

The pump works if:

- the cable is connected and pin 1 and pin 4 are connected.
- no cable is connected.

"External contact" operating mode

The pump performs one or more strokes if:

- Pin 2 and pin 4 are connected to each other for at least 20 ms. At the same time, pin 1 and pin 4 must also be connected to each other.

"External Analogue" operating mode

- The metering pump makes its first metering stroke at approx. 0.1 mA (4.1 mA) and enters into continuous operation at approx. 19.9 mA.

"Auxiliary frequency" operating mode

The pump works at a pre-set stroke rate if:

- Pin 5 and pin 4 are connected to each other. At the same time, pin 1 and pin 4 must also be connected to each other. The auxiliary frequency is factory-preset to the maximum stroke rate.

9.3.2 "Level switch" terminal

There is a connecting option for a 2-stage level switch with pre-warning and limit stop.

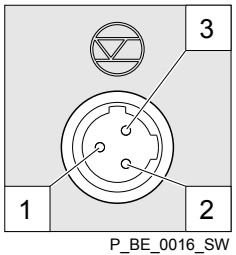

Fig. 11: Pump assignment

Electrical interface

Data	Value	Unit
Voltage with open contacts	5	V
Input resistance	10	kΩ

Control via:

- potential-free contact (load: 0.5 mA at 5 V) or
- Semiconductor switch (residual voltage < 0.7 V)

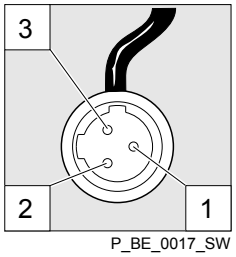

Fig. 12: Cable assignment

Pin	Function	3-wire cable
1	Earth GND	black
2	Minimum pre-warning	blue
3	Minimum limit stop	brown

9.4 Relay

9.4.1 Relay functions

Tab. 2: Beta b BT4b/BT5b

Identity code	Description	Type	Maximum voltage	Maximum current	Behaviour of relay type when retrofitting, as standard
0	no relay	-	-	-	-
1	Fault indicating relay	NC changeover contact	230 V	8 A	X

Identity code	Description	Type	Maximum voltage	Maximum current	Behaviour of relay type when retrofitting, as standard
3	Fault indicating relay	NO changeover contact	230 V	8 A	-
4	Fault indicating relay	N/O	24 V	100 mA	X
	Pacing relay	N/O	24 V	100 mA	-
5	Fault indicating relay	N/O	24 V	100 mA	-
	Pacing relay	N/O	24 V	100 mA	-

Tab. 3: Relay type switches in the event of...

Relay type	level Warning	level low	Calibrated stroke length Error	Processor Error
Fault indicating relay:	X	X	X	X

9.4.2 "Fault indicating relay" output (identity code 1 + 3)

A fault indicating relay can optionally be ordered. It is used to emit a signal when there is a fault with the pump and for the "Liquid level low, 1st stage" warning message and "Liquid level low 2nd stage" fault message.

A cut-off relay works when there are fault alerts from the pump and in the event of the "Liquid level low 2nd stage" alert.

The fault indicating relay can be retrofitted and is operational once attached to the relay board - refer to the "Operating Instructions for Retrofitting Relays for Beta b".

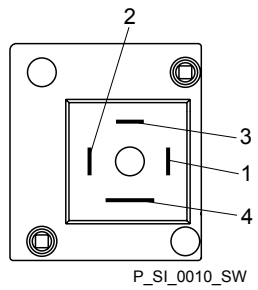

Fig. 13: Pump assignment

Electrical interface

Data	Value	Unit
Maximum contact load at 230 V and 50/60 Hz:	8	A
Minimum mechanical lifespan:	200,000	switching operations

Identity code 1 + 3

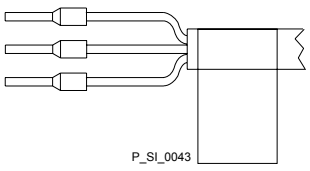

Fig. 14: Cable assignment

Pin assignment

To pin	VDE cable	Contact	CSA cable
1	white	NO (normally open)	white
2	green	NC (normally closed)	red
4	brown	C (common)	black

9.4.3 "Fault indicating relay" + "Pacing relay" output (identity code 4 + 5)

A fault indicating / pacing relay can optionally be ordered. The pacing output is electrically-isolated by means of an optocoupler with a semiconductor switch. The second switch is a relay.

The fault indicating /pacing relay can be retrofitted and is operational once attached to the relay board - refer to the "Operating Instructions for Retrofitting Relays for Beta b".

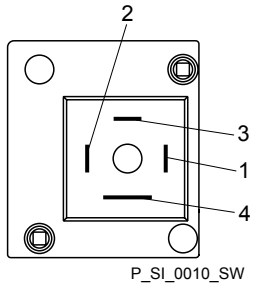

Fig. 15: Pump assignment

Electrical interface

for fault indicating relays:

Data	Value	Unit
Maximum contact load at 24 V and 50/60 Hz:	8	A
Minimum mechanical lifespan:	200,000	switching operations

for semiconductor switch pacing relay:

Data	Value	Unit
Residual voltage max. at I_c = 1 mA	0.4	V
Maximum current	100	mA
Maximum voltage	24	VDC
Pacing pulse duration, approx.	100	ms

Identity code 4 + 5

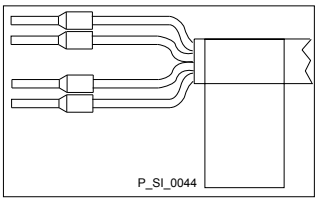

Fig. 16: Cable assignment

Pin assignment

To pin	VDE cable	Contact	Relay
1	yellow	NO (normally open)	Fault indicating relay
4	green	C (common)	Fault indicating relay
3	white	NO (normally open)	Pacing relay
2	brown	C (common)	Pacing relay

10 Start up

WARNING!

Dangerous reactions are possible due to contact of feed chemical with water

The feed chemical can mix and react in the liquid end with water remaining after testing in the factory.

- Read the safety data sheet on the feed chemical.
- Blast the liquid end with compressed air.
- Flush the liquid end with a suitable medium through the suction connector.

WARNING!

Fire hazard with flammable media

Only with flammable media: They can be ignited by oxygen.

- The pump may not work if there is a mixture of feed chemical with oxygen in the liquid end. A specialist may need to take appropriate actions (using inert gas, ...).

CAUTION!

Danger with hazardous feed chemicals

Contact with the feed chemical is possible provided the following handling instructions are adhered to.

- If the feed chemical is dangerous, take appropriate safety precautions when carrying out the following handling instructions.
- Adhere to the feed chemical safety data sheet.

CAUTION!

Warning of feed chemical spraying around

An unsuitable feed chemical can damage the parts of the pump that come into contact with the chemical.

- Take into account the resistance of the materials that will come into contact with the medium when selecting the feed chemical - refer to the ProMinent® Resistance List in the Product Catalogue or at www.prominent.com.

CAUTION!

FDA pumps only: problems with hygiene possible

The O-rings supplied can become slightly contaminated through packaging and shipment.

- Flush through before using the pumps.

- *Reliable metering cannot be guaranteed after the metering pump has been idle for some time, as the feed chemical can crystallise in the valves and on the diaphragm. Regularly check the valves and diaphragm.*
- *Only adjust the stroke length when the pump is running.*
- *The metering pump should prime at 100% stroke length, as the priming lift depends on the stroke volume when the liquid end is empty. If the metering pump has to prime at a smaller stroke length and is not priming, reduce the priming lift (i.e. briefly lift up the storage tank with the feed chemical).*
- *SEK-type only: The suction lift corresponds to the priming lift, as some gas always remains in the liquid end with gaseous media.*

Starting up the metering pump

1. Fill the liquid end - *„Filling the liquid end“ on page 35*.
2. Check the pump connectors and connections for leak-tightness.
3. Check the suction valve and discharge valve for leak-tightness and tighten if necessary.
4. Check the liquid end for leak-tightness and tighten the screws on the dosing head if necessary - see below for starting torque.
5. Only with bleed valve: Check whether the bleed valve is closed.
6. Start up the relief valve in the system in line with its operating instructions.
7. Start up the system.
8. After 24 hours of operation: Tighten the screws on the dosing head - see below for tightening torque.

Tightening torque

Data	Value	Unit
Tightening torque for screws:	4.5 ... 5.0	Nm

Draining the liquid end

With feed chemicals that should not come into contact with water:

1. Turn the pump so that the pressure connector is facing downwards.
2. Allow water to flow out of the liquid end.
3. Flush the suction connector from above with a suitable medium or blast with compressed air.

Filling the liquid end

With liquid ends without bleed valve:

1. Connect the suction line to the liquid end but not yet to the discharge line.
2. If fitted: close the shut-off valve on the discharge side.
3. Connect a short, transparent section of hose to the discharge valve.
4. Switch on the metering pump and allow it to work at maximum stroke length and stroke rate until some feed chemical becomes visible in the short section of hose.

   ⇨ The liquid end has been filled completely without bubbles.
5. Switch off the metering pump.
6. Connect the discharge line to the liquid end.

   ⇨ The metering pump is ready for operation.

With liquid ends with bleed valves (not SEK):

1. Connect the suction and discharge line to the liquid end.
2. Connect the return line.
3. Open the bleed valve by turning the star-shaped handle in a counter-clockwise direction.
   ⇨ You can now use the return line to bleed the pump.
4. Switch on the metering pump and allow it to work at maximum stroke length and stroke rate until some feed chemical becomes visible in the return or discharge line.
   ⇨ The liquid end has been filled completely without bubbles.
5. Switch off the metering pump.
6. Close the bleed valve.
   ⇨ The metering pump is ready for operation.

With self-bleeding metering pumps (SEK type):

- *The return line is connected to the vertical valve on the top of the liquid end. It is labelled with a red sleeve ex-works.*
- *The discharge line is connected to the horizontal valve.*

1. Switch on the metering pump and allow it to work at maximum stroke length and stroke rate until some feed chemical becomes visible in the return or discharge line.
   ⇨ The liquid end has been filled completely without bubbles.
2. Switch off the metering pump.
   ⇨ The metering pump is ready for operation.

Setting the precise dosage

Stroke length and stroke rate

- *Select as large a stroke length as possible with gaseous feed chemicals.*
- *Select as high a stroke rate as possible for good mixing.*
- *Do not set the stroke length to less than 30% for precise metering using quantity-proportional metering.*

11 Operation

WARNING!

Fire hazard with flammable media

Only with combustible media: These may start to burn when combined with oxygen.

– During filling and draining of the liquid end, an expert must ensure that feed chemical does not come into contact with oxygen.

WARNING!

Danger of electric shock

Incompletely installed electrical options can allow moisture into the inside of the housing.

– Knock-out openings in the pump housing must be equipped with matching modules or be sealed in a leak-tight manner.

WARNING!

Danger of electric shock

A mains voltage may exist inside the pump housing.

– If the pump housing has been damaged, you must disconnect it from the mains immediately. It may only be returned to service after an authorised repair.

11.1 Manual

Personnel: ■ Instructed personnel

11.1.1 Capacity

The capacity is determined by the stroke length and the stroke rate.

The stroke length is adjusted by the stroke length adjustment knob within a range of 0 ... 100 %. A stroke length of between 30 ... 100 % (SEK type: 50 ... 100 %) is recommended to achieve the specified reproducibility!

Data	Value	Unit
Recommended stroke length, standard type	30 ... 100	%
Recommended stroke length, SEK type	50 ... 100	%

The stroke rate can be set within a range of 10 ... 100 % using the multi-functional switch.

11.1.2 Functions

The pump has the following functions:

"Pause" function

The pump can be remotely stopped via the "External Control" terminal. The "Pause" function only works via the "External Control" terminal.

"Stop" function (optional)

The pumps can be stopped by turning the multifunctional switch to "Stop" without disconnecting it from the mains power supply.

"Priming" function

Priming (transient conveyance at maximum frequency) can be provided by turning the multifunctional switch to "Test".

"Level switch" function

Information about the liquid/powder level in the feed chemical container is reported to the pump. To do so, a two-stage level switch must be fitted; it is connected to the "Level switch" terminal.

"Auxiliary rate" function

Enables switching of a stroke rate via the "External control" jack. This auxiliary rate has priority over the operating mode stroke rate settings . In the standard version, the "Auxiliary frequency" function is programmed to 100 % stroke rate.

11.1.3 External contact

"Extern" operating mode:

In the Extern Contact operating mode, either a series of strokes can be triggered or an inbound series of contacts can be stepped down via the pulse control switch by a single contact on the "External control" terminal. To do so, the multifunctional switch has to be turned to "Extern".

Tab. 4: Explanation of the stepped-down values:

Settable values	Incoming contacts	Strokes performed
1:1	1	1
1:2	2	1
1:4	4	1
1:8	8	1
1:16	16	1
1:32	32	1
1:64	64	1

Tab. 5: Explanation of stepped-up values:

Settable values	Incoming contacts	Strokes performed
1:1	1	1
2:1	1	2
4:1	1	4
8:1	1	8
16:1	1	16
32:1	1	32
64:1	1	64

11.1.4 External analog

"External Analogue" operating mode

In "External Analogue" operating mode, the stroke rate can be controlled by an mA signal via the pulse control switch. To do so, the multifunctional switch has to be turned to "Extern".

In the same way, a single contact via the pulse control switch at the "external control" terminal can either be used to trigger a series of strokes or to step down an incoming series of contacts. To do so, the multifunctional switch has to be turned to "Extern".

Tab. 6: Explanation of the stepped-down values:

Settable values	Incoming contacts	Strokes performed
such as "External Analogue"	such as "External Analogue"	such as "External Analogue"
...	...	...
01:16	16	1
01:32	32	1
0-20 mA	-	corresponding to the mA signal

Tab. 7: Explanation of stepped-up values:

Settable values	Incoming contacts	Strokes performed
such as "External Analogue"	such as "External Analogue"	such as "External Analogue"
...	...	...
16:1	1	16
32:1	1	32
4-20 mA	-	corresponding to the mA signal

11.2 Remote operation

There is an option to control the pump remotely via a signal cable - refer to your system documentation and to "Electrical Installation".

12 Maintenance

WARNING!
It is mandatory that you read the safety information and specifications in the "Storage, Transport and Unpacking" chapter prior to shipping the pump.

WARNING!
Fire hazard with flammable media
Only with combustible media: These may start to burn when combined with oxygen.

– During filling and draining of the liquid end, an expert must ensure that feed chemical does not come into contact with oxygen.

CAUTION!
Warning of feed chemical spraying around
Feed chemical can spray out of the hydraulic components if they are manipulated or opened due to pressure in the liquid end and adjacent parts of the system.

– Disconnect the pump from the mains power supply and ensure that it cannot be switched on again by unauthorised persons.
– Depressurise the system before commencing any work on hydraulic parts.

Third party spare parts for the pumps may lead to problems when pumping.

– *Use only original spare parts.*
– *Use the correct spare parts kits. In the event of doubt, refer to the exploded views and ordering information in the appendix.*

Standard liquid ends:

Interval	Maintenance work	Personnel
Quarterly*	■ Check the metering diaphragm for damage** - refer to "Repair". ■ Check that the hydraulic lines are fixed firmly to the liquid end. ■ Check that the suction valve and discharge valve are fitted tightly. ■ Check the tightness of the entire liquid end - particularly around the leakage hole - refer to „*Standard liquid ends:*“ *on page 40*! ■ Check that the flow is correct: Allow the pump to prime briefly - turn the multifunctional switch briefly to "Test" ■ Check that the electrical connections are intact. ■ Check the integrity of the housing. ■ Check that the dosing head screws are tight.	Technical personnel

* Under normal loading (approx. 30 % of continuous operation)

Under heavy loading (e.g. continuous operation): Shorter intervals.

** Check the diaphragm frequently with feed chemicals that put particular pressure on the diaphragm, e.g. those containing abrasive additives.

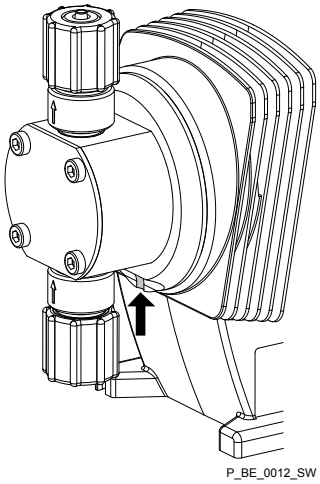

Fig. 17: Leakage hole

Liquid ends with bleed valve:

Interval	Maintenance work
Quarterly*	In addition: ■ Check that the bypass line is fixed firmly to the liquid end ■ Check that the bleed valve is tight. ■ Check the discharge and bypass line for kinks ■ Check that the bleed valve is operating correctly.

* Under normal loading (approx. 30 % of continuous operation)

Under heavy loading (e.g. continuous operation): Shorter intervals.

Tightening torque

Data	Value	Unit
Tightening torque for screws:	4.5 ... 5.0	Nm

13 Repairs

Safety information

WARNING!

Danger of electric shock

Unauthorised repairs inside the pump can result in an electric shock.

For this reason, only allow a ProMinent branch or representative to perform repairs inside the pump, in particular the following:

- Replacement of damaged mains connection lines
- Replacement of fuses
- Replacement of electronic control

WARNING!

Fire hazard with flammable media

Only with flammable media: They can be ignited by oxygen.

- The pump may not work if there is a mixture of feed chemical with oxygen in the liquid end. A specialist may need to take appropriate actions (using inert gas, ...).

WARNING!

It is mandatory that you read the safety information and specifications in the "Storage, Transport and Unpacking" chapter prior to shipping the pump.

WARNING!

Contact with the feed chemical

Parts that come into contact with the feed chemical are exposed and touched during repair work.

- Protect yourself against the feed chemical in case it is hazardous. Read the safety data sheet on the feed chemical.

CAUTION!

Warning of feed chemical spraying around

Feed chemical can spray out of the hydraulic components if they are manipulated or opened due to pressure in the liquid end and adjacent parts of the system.

- Disconnect the pump from the mains power supply and ensure that it cannot be switched on again by unauthorised persons.
- Depressurise the system before commencing any work on hydraulic parts.

Only with the FDA design:

WARNING!

- Only use the right ProMinent seals.
- Have the seals professionally cleaned before fitting.

Repairs that may be carried out by qualified technical personnel, in accordance with the operating instructions:

- Cleaning valves
- Replacing the diaphragm

All other repairs: Contact the responsible ProMinent branch!

13.1 Cleaning valves

Warning of faulty operation

Refer to the exploded drawings in the appendix when working on the unit.

Cleaning a discharge valve or a suction valve on types (PP, PV, NP) 1000, 1601, 1602, 1604, 2504

Warning of faulty operation

- *Discharge and suction valves differ from each other! Only take them apart one after each other, so that you do not confuse the components!*
- *Only use new components which fit your valve - both in terms of shape and chemical resistance!*
- *Recalibrate the pump after replacing a valve!*
- *Using an Allen key or similar, insert it into the smaller hole of the pressure connector and push the valve inserts out of it.*

A suction valve is constructed in almost the same way as a discharge valve.

Please note, however, that:

- the two valve inserts are identical here.
- There is an additional spacer between the valve inserts.
- There is a shaped seal in the dosing head instead of an O-ring.
- The flow direction of the suction connector is the opposite to that of the pressure connector.

Cleaning a discharge valve or a suction valve on types (PP, PV, NP) 0708, 1008, 0220, 0420, 0413, 0713, 0232

Warning of faulty operation

- *Discharge and suction valves differ from each other! Only take them apart one after each other, so that you do not confuse the components!*
- *Only use new components which fit your valve (both in terms of shape and chemical resistance)!*
- *With the PVT material version, the ball seat is integrated in the dosing head and so has to be cleaned separately!*
- *With the PVT material version, the discharge valve is a double ball valve!*
- *Using an Allen key or similar, insert it into the smaller hole of the pressure connector and push the valve inserts out of it.*

A suction valve is constructed in almost the same way as a discharge valve.

Please note, however, that:

- The flow direction of the suction connector is the opposite to that of the pressure connector.

13.2 Replacing the diaphragm

WARNING!
A little feed chemical may have accumulated behind the diaphragm in the backplate following a leak - depending on the design!

– Take this feed chemical into consideration when you are planning a repair - especially if it is hazardous!

- If necessary take protective measures.
- Adhere to the material safety data sheet for the feed chemical.
- Ensure that the system is at atmospheric pressure.

1. Empty the liquid end (turn the liquid end upside down and allow the feed chemical to run out; flush out with a suitable medium; flush the liquid end thoroughly when using hazardous feed chemicals!)
2. Turn the stroke adjustment dial as far as 0% stroke length when the pump is running (the drive axle is then difficult to turn).
3. Switch off the pump.
4. Unscrew the hydraulic connectors on the discharge and suction side.
5. With PP types with bleed valve: Firstly remove the bleed valve (grip), then lift off the cover of the liquid end with a screw driver.
6. Remove the screws (1).
7. Loosen the dosing head (2) and the backplate (4) from the pump housing (6) - but only loosen!
8. Hold the pump housing (6) with one hand and clamp the diaphragm (3) with the other hand between the dosing head (2) and the backplate (4).
9. Loosen the diaphragm (3) from the drive axle with a gentle backwards turn of the dosing head (2), diaphragm (3) and backplate (4) in an anticlockwise direction.
10. Unscrew the diaphragm (3) completely from the drive axle.
11. Remove the backplate (4) from the pump housing (6).
12. Check the condition of the safety diaphragm (5) and replace if necessary.
13. Push the safety diaphragm (5) onto the drive axle only until it lies flush with the pump housing (6) and no further!
14. Tentatively screw the new diaphragm (3) onto the drive axle as far as the stop.

    ⇨ The diaphragm (3) is now sitting at the stop of the thread.
15. Should this not work, remove dirt or swarf from the threads and screw the diaphragm (3) onto the drive axle correctly this time.

Ensure that the diaphragm is screwed exactly onto the drive axle otherwise the pump will subsequently not meter accurately!

16. Unscrew the diaphragm (3) again.
17. Place the backplate (4) onto the pump housing (6).

CAUTION!

Leakage may become apparent at a later stage

– Make sure that the leakage hole points downwards when the pump is installed later - please refer to !
– Place the backplate (4) immediately into the correct position on the pump housing (6)! Do not twist the backplate on the pump housing to prevent the safety diaphragm (5) from becoming warped!

18. Place the diaphragm (3) into the backplate (4).

CAUTION!

Leakage may become apparent at a later stage

– Do not over-tighten the diaphragm (3) in the following step!
– Ensure that the backplate (4) remains in its position so that the safety diaphragm does not become warped!

19. Hold the backplate (4) firmly and screw the diaphragm (3) in a clockwise direction until it is sitting tightly (the twisting resistance of the return spring can be felt).
20. Set the stroke length to 100%.
21. Place the dosing head (2) with the screws (1) onto the diaphragm (3) and the backplate (4) - ensure that the suction connector points downwards when the pump is in its subsequent fitting position.
22. Gently tighten the screws (1) and then tighten them diagonally. See below for the tightening torque.
23. With PP types with bleed valve: Allow the cover of the liquid end to rest in the dosing head, then press the grip on the bleed valve into the dosing head.

CAUTION!

Leakage possible

– Check the tightening torque of the screws after 24 hours of operation!
– With PP and PV dosing heads, check the tightening torque again after three months!

Tightening torque

Data	Value	Unit
Tightening torque for screws:	4.5 ... 5.0	Nm

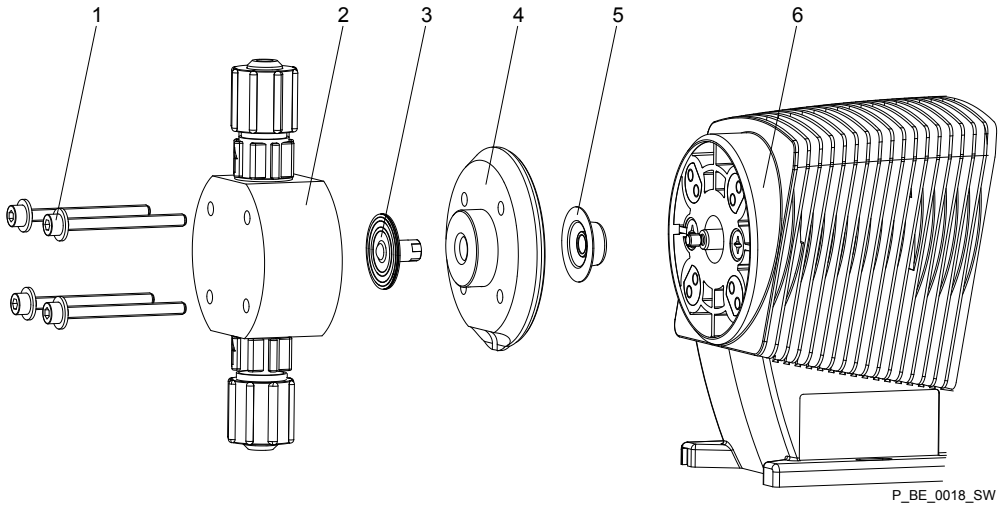

Fig. 18: Partially exploded view of liquid end

14 Troubleshooting

Safety information

WARNING!

Warning of hazardous feed chemical

Should a dangerous feed chemical be used: it may escape from the hydraulic components when working on the pump, material failure or incorrect handling of the pump.

– Take appropriate protective measures before working on the pump (e.g. safety glasses, safety gloves, ...). Adhere to the material safety data sheet for the feed chemical.
– Drain and flush the liquid end before working on the pump.

WARNING!

Fire hazard with flammable media

Only with flammable media: They can be ignited by oxygen.

– The pump may not work if there is a mixture of feed chemical with oxygen in the liquid end. A specialist may need to take appropriate actions (using inert gas, ...).

CAUTION!

Warning of feed chemical spraying around

Feed chemical can spray out of the hydraulic components if they are manipulated or opened due to pressure in the liquid end and adjacent parts of the system.

– Disconnect the pump from the mains power supply and ensure that it cannot be switched on again by unauthorised persons.
– Depressurise the system before commencing any work on hydraulic parts.

Only with the FDA version:

WARNING!

Feed chemical can be physiologically contaminated

In the event of a diaphragm rupture, non-FDA-certified parts also become wetted.

– Take this into account if necessary.

14.1 Faults without a fault message

Fault description	Cause	Remedy	Personnel
Pump does not prime in spite of full stroke motion and bleeding.	Minor crystalline deposits on the ball seat due to the valves drying out.	Take the suction hose out of the storage tank and thoroughly flush out the liquid end.	Technical personnel
	Serious crystalline deposits on the ball seat due to the valves drying out.	Dismantle the valves and clean them - refer to "Repair".	Technical personnel

Fault description	Cause	Remedy	Personnel
Fluid escapes from the backplate.	The screws in the dosing head are too loose.	Tighten the screws in the dosing head crosswise - refer to "Repair" for tightening torque.	Instructed personnel
	The diaphragm is not leaktight.	Replace the diaphragm - refer to "Repair".	Technical personnel
Green LED display (operating indicator) does not light up.	The wrong mains voltage or no mains voltage is connected.	Connect the pump correctly to the specified mains voltage - according to the specification on the nameplate.	Electrician

14.2 Fault messages

Fault description	Cause	Remedy	Personnel
Red LED display (fault indicator) lights up and the pump stops.	The fluid level in the storage tank has reached "Liquid level low 2nd stage".	Top up the storage tank.	Instructed personnel
	The pump is in "External Analogue" operating mode and the control current has risen above 23 mA (fault signal).	Clear the cause of the fault on the pump.	
	The pump is in "External Analogue" operating mode, set to "4-20 mA" and the control current has fallen below 4 mA.	Clear the cause of the low control current (e.g. cable break).	
	The multifunctional switch is not turned to "External" but an external cable is connected and the pump has the identity code feature "Control type" - "1": "with lock".	Either turn the multifunctional switch to "External" or remove the External cable from the pump.	Technical personnel

14.3 Warning messages

Fault description	Cause	Remedy	Personnel
Yellow LED display (warning indicator) lights up.	The fluid level in the storage tank has reached "Liquid level low 1st stage".	Top up the storage tank.	Instructed personnel

14.4 All other faults

Please contact the responsible ProMinent branch or representative!

15 Decommissioning

Decommissioning

WARNING!

Danger from chemical residues

There is normally chemical residue in the liquid end and on the housing after operation. This chemical residue could be hazardous to people.

– It is mandatory that the safety notes in the "Storage, Transport and Unpacking" chapter are read before shipping or transport.
– Thoroughly clean the liquid end and the housing of chemicals and dirt. Adhere to the material safety data sheet for the feed chemical.

WARNING!

Warning of hazardous feed chemical

Should a dangerous feed chemical be used: it may escape from the hydraulic components when working on the pump, material failure or incorrect handling of the pump.

– Take appropriate protective measures before working on the pump (e.g. safety glasses, safety gloves, ...). Adhere to the material safety data sheet for the feed chemical.
– Drain and flush the liquid end before working on the pump.

WARNING!

Fire hazard with flammable media

Only with combustible media: These may start to burn when combined with oxygen.

– During filling and draining of the liquid end, an expert must ensure that feed chemical does not come into contact with oxygen.

CAUTION!

Warning of feed chemical spraying around

Feed chemical can spray out of the hydraulic components if they are manipulated or opened due to pressure in the liquid end and adjacent parts of the system.

– Disconnect the pump from the mains power supply and ensure that it cannot be switched on again by unauthorised persons.
– Depressurise the system before commencing any work on hydraulic parts.

Danger of damage to the device

Take into account the information in the "Storage, Transport and Unpacking" chapter if the system is decommissioned for a temporary period.

1. Disconnect the pump from the mains/power supply.
2. Drain the liquid end by turning the pump upside down and allowing the feed chemical to run out.

3. Flush the liquid end with a suitable medium; flush the dosing head thoroughly when using hazardous feed chemicals!

Disposal

CAUTION!

Environmental hazard due to electronic waste

There are electronic components in the pump, which can have a toxic effect on the environment.

- Separate the electronic components from the remaining parts.
- Note the pertinent regulations currently applicable in your country!

16 Technical data

16.1 Performance data

Beta b operating at 180 strokes/minute and 100 % stroke length

Type	Pump capacity at maximum back pressure			Pump capacity at medium back pressure			Connection size outer ∅ x inner ∅	Suction lift*	Priming lift**	Maximum priming pressure on suction side
	bar	l/h	ml/stroke	bar	l/h	ml/stroke	mm	m WS	m WS	bar
Beta b										
1000	10	0.74	0.069	5.0	0.82	0.076	6x4	6.0	1.8	8
0700	7	0.8	0.074	3.5	0.88	0.074	6x4	6.0	1.8	8
0400	4	0.84	0.078	2.0	0.92	0.078	6x4	6.0	1.8	8
2001	20	0.96	0.089	10	1.5	0.13	6x3	6.0	2.0	8
1601	16	1.1	0.10	8.0	1.40	0.13	6x4	6.0	2.0	8
1001	10	1.3	0.12	5.0	1.5	0.14	6x4	6.0	2.0	8
0701	7	1.4	0.13	3.5	1.7	0.14	6x4	6.0	2.0	8
0401	4	1.5	0.14	2.0	2.0	0.18	6x4	6.0	2.0	8
2002	20	1.7	0.16	10	2.8	0.26	6x3	6.0	2.5	5.5
1602	16	2.2	0.20	8.0	2.5	0.24	6x4	6.0	2.5	5.5
1002	10	2.4	0.22	5.0	2.8	0.26	6x4	6.0	2.5	5.5
0702	7	2.6	0.24	3.5	3.1	0.29	6x4	6.0	2.5	5.5
0402	4	2.8	0.26	2.0	3.6	0.36	6x4	6.0	2.5	5.5
1604	16	3.6	0.33	8.0	4.3	0.40	6x4	5.0	3.0	3
1004	10	3.9	0.36	5.0	4.7	0.44	6x4	5.0	3.0	3
0704	7	4.2	0.39	3.5	5.1	0.47	6x4	5.0	3.0	3
0404	4	4.5	0.42	2.0	5.6	0.52	6x4	5.0	3.0	3
0708	7	7.1	0.66	3.5	8.4	0.78	8x5	4.0	2.0	2
0408	4	8.3	0.77	2	10.0	0.93	8x5	4.0	2.0	2
0413	4	12.3	1.14	2.0	14.2	1.31	8x5	3.0	2.5	1.5
0220	2	19.0	1.76	1.0	20.9	1.94	12x9	2.0	2.0	1
2504	25	2.9	0.27	12.5	3.7	0.34	8x4[1]	4.0	3.0	3
1605	16	4.1	0.38	8.0	4.9	0.45	8x5	4.0	3.0	3
1008	10	6.8	0.63	5.0	8.3	0.76	8x5	3.0	3.0	2
0713	7	11.0	1.02	3.5	13.1	1.21	8x5	3.0	3.0	1.5
0420	4	17.1	1.58	2.0	19.1	1.77	12x9	3.0	3.0	1
0232	2	32.0	2.96	1.0	36.2	3.35	12x9	2.0	2.0	0.8
Beta b metering pumps with self-bleeding dosing head SEK* **										
1601	16	0.59	0.055	8.0	0.80	0.072	6x4	6.0	2.0	0.5
1001	10	0.72	0.067	5.0	0.60	0.08	6x4	6.0	2.0	0.5
0701	7	0.84	0.078	3.5	1.12	0.10	6x4	6.0	2.0	0.5

Type	Pump capacity at maximum back pressure			Pump capacity at medium back pressure			Connection size outer ∅ x inner ∅	Suction lift*	Priming lift**	Maximum priming pressure on suction side
	bar	l/h	ml/ stroke	bar	l/h	ml/ stroke	mm	m WS	m WS	bar
0401	4	0.9	0.083	2.0	1.2	0.11	6x4	6.0	2.0	0.5
2002	20	0.78	0.07	10.0	1.8	0.17	6x4	6.0	2.5	0.5
1602	16	1.40	0.13	8.0	1.70	0.16	6x4	6.0	2.5	0.5
1002	10	1.7	0.16	5.0	2.0	0.18	6x4	6.0	2.5	0.5
0702	7	1.8	0.17	3.5	2.2	0.20	6x4	6.0	2.5	0.5
0402	4	2.1	0.19	2.0	2.5	0.23	6x4	6.0	2.5	0.5
1604	16	2.7	0.25	8.0	3.6	0.33	6x4	6.0	3.0	0.5
1004	10	3.3	0.30	5.0	3.9	0.36	6x4	6.0	3.0	0.5
0704	7	3.6	0.33	3.5	4.0	0.37	6x4	6.0	3.0	0.5
0404	4	3.9	0.36	2.0	4.2	0.39	6x4	6.0	3.0	0.5
0708	7	6.60	0.61	3.5	7.50	0.69	8x5	6.0	2.0	0.5
0408	4	7.5	0.64	2.0	8.1	0.77	8x5	6.0	2.0	0.5
0413	4	10.8	1.0	2.0	12.6	1.17	8x5	6.0	2.5	0.5
0220	2	16.2	1.5	1.0	18.0	1.67	12x9	6.0	2.0	0.5
1008	10	6.3	0.58	5.0	7.5	0.69	8x5	6.0	3.0	0.5
0713	7	10.5	0.94	3.5	12.3	1.14	8x5	6.0	2.5	0.5
0420	4	15.6	1.44	2.0	17.4	1.61	12x9	6.0	2.5	0.5
Beta b metering pumps with self-bleeding dosing head SER****										
1602	10	1.40	0.13	8.0	1.70	0.174	6x4	6.0	1.8	0.5
1604	10	2.7	0.25	8.0	3.6	0.33	6x4	6.0	1.8	0.5
0708	7	6.60	0.61	3.5	7.50	0.69	8x5	4.0	1.8	0.5
0413	4	10.8	1.0	2.0	12.6	1.17	8x5	5.0	1.8	0.5
0220	2	16.2	1.5	1.0	18.0	1.67	12x9	2.0	2.0	0.5
1008	10	6.3	0.58	5.0	7.5	0.69	8x5	3.0	1.8	0.5
0713	7	10.5	0.97	3.5	12.3	1.14	8x5	3.0	1.8	0.5
0420	4	15.6	1.44	2.0	17.4	1.61	12x9	3.0	1.8	0.5

* - Suction lift with a filled suction line and filled liquid end. With self-bleeding dosing head with air in the suction line.

** - Priming lift with clean and moist valves. Priming lift at 100% stroke length and free outlet or opened bleed valve.

*** - The given performance data constitutes guaranteed minimum values, calculated using water as the medium at room temperature. The bypass connection with a self-bleeding dosing head SEK is 6x4 mm.

*** - The given performance data constitutes guaranteed minimum values, calculated using water as the medium at room temperature.

[1] - The connector width is 6 mm with SST material versions.

Beta b Metering pumps with dosing heads for higher-viscosity media (HV) have a 10-20% lower capacity and are not self-priming. Connector G 3/4-DN 10 with hose nozzle d16-DN10.

16.2 Accuracy

16.2.1 Standard Liquid End

Data	Value	Unit
Capacity range of the series	-5 ... +10	% *
Reproducibility	±2	% **

* - at max. stroke length and max. operating pressure for all material versions

** - at constant conditions and min. 30 % stroke length

16.2.2 Self-Bleeding Liquid End

As the self-bleeding liquid end is used with outgassing media and when operating with air bubbles, no dosing accuracy or reproducibility can be provided.

The recommended minimum stroke length with self-bleeding dosing pumps is 50 %.

16.3 Viscosity

The liquid ends are suitable for the following viscosity ranges:

Version	Range	Unit
standard	0 ... 200	mPas
With valve springs	200 ... 500	mPas
Self-bleeding (SEK)	0 ... 50	mPas
HV (highly viscous)	500 ... 3000*	mPas

* Only when the installation is correctly adjusted

16.4 Material specifications

Standard liquid ends

Design	Dosing head	Suction/ pressure connector	Seals	Valve balls
PPE	Polypropy-lene	Polypropy-lene	EPDM	Ceramic
PPB	Polypropy-lene	Polypropy-lene	FPM	Ceramic
PPT	Polypropy-lene	PVDF	PTFE	Ceramic
NPE	Clear acrylic	PVC	EPDM	Ceramic
NPB	Clear acrylic	PVC	FPM	Ceramic
NPT	Clear acrylic	PVDF	PTFE	Ceramic
PVT	PVDF	PVDF	PTFE	Ceramic
TTT	PTFE with carbon	PTFE with carbon	PTFE	Ceramic
SST	Stainless steel 1.4401	Stainless steel 1.4571	PTFE	Ceramic

Only the self-bleeding design in material versions PPE, PPB, NPE and NPB with a valve spring made of Hastelloy C, PVDF valve insert. Diaphragm with a PTFE coating.

FPM = fluorine rubber.

All wetted materials in the design with FDA-certified seals comply with the following FDA guidelines:

Material	Guideline
PTFE	21CFR177.1510
PVDF	21CFR177.2510
PP	21CFR177.1520
EPDM/FKM	21CFR177.2600

Pump

Housing parts: polyphenylene ether (PPE with fibreglass)

16.5 Electrical data

Version: 100 - 230 V ±10 %, 50/60 Hz, Beta b BT4b

Data	Value	Unit
Nominal power, approx.	6.4 ... 16.5	W
Current I eff	0.65 ... 0.1	A
Peak current	4.2 ...1.3	A
Switch on peak current, (within approx. 50 ms falling)	15	A
Fuse*	0.8	AT

Version: 100 - 230 V ±10 %, 50/60 Hz, Beta b BT5b

Data	Value	Unit
Nominal power, approx.	20 ... 25	W

Data	Value	Unit
Current I eff	0.9 ... 0.3	A
Peak current	5.9 ... 2.3	A
Switch on peak current, (within approx. 50 ms falling)	15	A
Fuse*	0.8	AT

* Fuses must have VDE, UL and CSA certification. E.G. type 19195 manufactured by Wickmann in compliance with IEC Publ. 127 - 2/3.

Power consumption

Type	Performance	Type	Performance	Type	Performance
	W		W		W
1000	7.6	1602	12.2	0408	12.7
0700	6.4	1002	10.6	0413	16.5
0400	5.7	0702	9.3	0220	16.5
2001	10.5	0402	7.9	2504	21.2
1601	10.0	1604	16.5	1008	20.3
1001	8.3	1004	12.7	0713	21.2
0701	7.5	0704	11.1	0420	21.2
0401	6.9	0404	9.5	0232	24.9
2002	13.5	0708	16.5		

Design: 12 - 24 VDC# -8/+24 %, identity code M

Parameter	Beta b BT4b
Nominal power, approx.	17.4 W.
Nominal current (averaged at 180 H/min)	3.9 ... 1.9 A.
Peak current	15.6... 8.7 A.
closed current (no stroke)	32 ... 24 mA.
Fuse*	5 AT

SELV in accordance with EN 60335-1

* 5 AT, 5x20 mm, order no. 712028

The pump only works if the polarity is correct.

Design: 24 VDC# -15/+24 %, identity code N

Parameter	Beta b BT5b
Nominal power, approx.	24.4 W.
Nominal current (averaged at 180 H/min)	2.5 A.
Peak current	11.7 A.
Closed current (no stroke)	24 mA.
Fuse*	5 AT

SELV in accordance with EN 60335-1

* 5 AT, 5x20 mm, order no. 712028

The pump only works if the polarity is correct.

16.6 Temperatures

Pump, fully assembled

Data	Value	Unit
Storage and transport temperature:	-10 ... +50	°C
Ambient temperature in operation (power end/drive and control):	-10 ... +45	°C

Liquid end, long-term*

Tab. 8: Maximum temperature, liquid end

Material version	Value	Unit
PP	50	°C
NP	40	°C
PV	50	°C
TT	50	°C
SS	50	°C

* long term at max. operating pressure, dependent on the ambient temperature and the feed chemical temperature

Minimum temperature, liquid end

Tab. 9: Minimum temperature, liquid end

Material version	Value	Unit
All	-10	°C

Liquid end, short-term*

Tab. 10: Maximum temperature, liquid end

Material version	Value	Unit
PPT	100	°C
NPT	60	°C
PVT	120	°C
TTT	120	°C
SST	120	°C

* Temp. max., for 15 min at max. 2 bar, dependent on the ambient and feed chemical temperatures

16.7 Climate

Data	Value	Unit
Maximum air humidity *:	95	% rel. humidity

* non-condensing

Exposure in a humid and alternating climate:

FW 24 according to DIN 50016

16.8 Degree of Protection and Safety Requirements

Degree of protection

Protection against contact and humidity:

IP 66 according to DIN EN 60529 with contamination level 2

NEMA 4X / indoor as per NEMA 250

Safety Requirements

Degree of protection:

1 - mains power connection with protective earth conductor

16.9 Compatibility

Some hydraulic parts of the Beta® b are identical to those of the Beta® a, gamma/ L and delta®.

There is most compatibility with pumps of the Beta® a, gamma/ L and delta® series with the following components and accessories:

- Signal cable gamma/Vario 2-, 4- and 5-wire for the "Extern" function
- Level switch 2-stage (gamma / Vario / Beta®)
- Dosing line cross-sections
- Standard gamma connector kit
- Chemical feed container
- Overall height (distance between the suction and discharge connector)
- Same use of accessories, such as back pressure valves, multifunctional valves, dosing monitor and flushing equipment

16.10 Sound pressure level

Sound pressure level

Sound pressure level LpA < 70 dB according to EN ISO 20361

at maximum stroke length, maximum stroke rate, maximum back pressure (water)

16.11 Shipping weight

Shipping weight of Beta b types - in kg

Material	BT4b						BT5b		
	1000, 0700, 0400	2001, 1601, 1001, 0701, 0401	2002, 1602, 1002, 0702, 0402	1604, 1004, 0704, 0404	0708, 0408, 0413	0220	2504, 1008, 0713	0420	0232
PP, NP, PV, TT	2.5	2.9	2.9	3.1	3.1	3.3	4.5	4.7	5.1
SS	3.0	3.6	3.6	3.9	3.9	4.4	5.3	5.8	6.6

17 Dimensional drawings

- *Compare the dimensions on the dimensional drawing with those of the pump.*
- *All dimensions are in mm.*

Dimensional drawing Beta b, material version PP

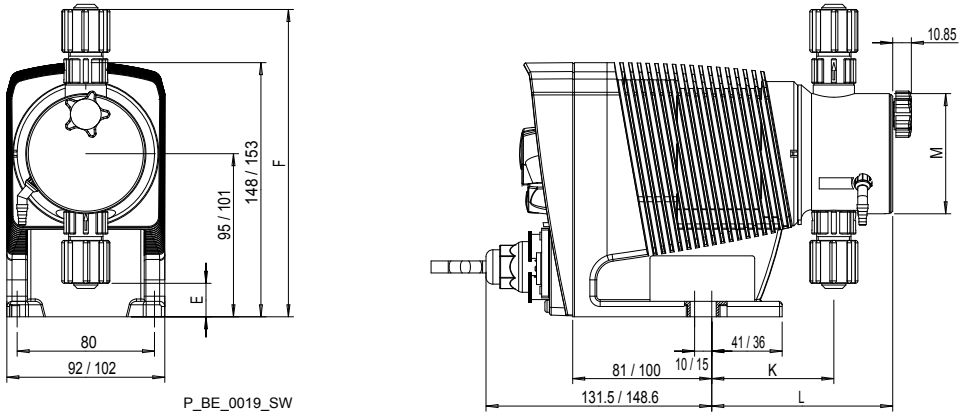

Fig. 19: Dimensional drawing Beta b BT4b/BT5b, material version PP - dimensions in mm

	1000 - 1604	0708 - 0220	1008 - 0420	0232
E	19.5	7	14	1.5
F	179	186.5	191.5	200.5
K	71	77.5	74	77.5
L	105.5	111	107.5	94.5
M	Ø 70	Ø 90	Ø 90	Ø 110

Dimensional drawing Beta b, material version NP

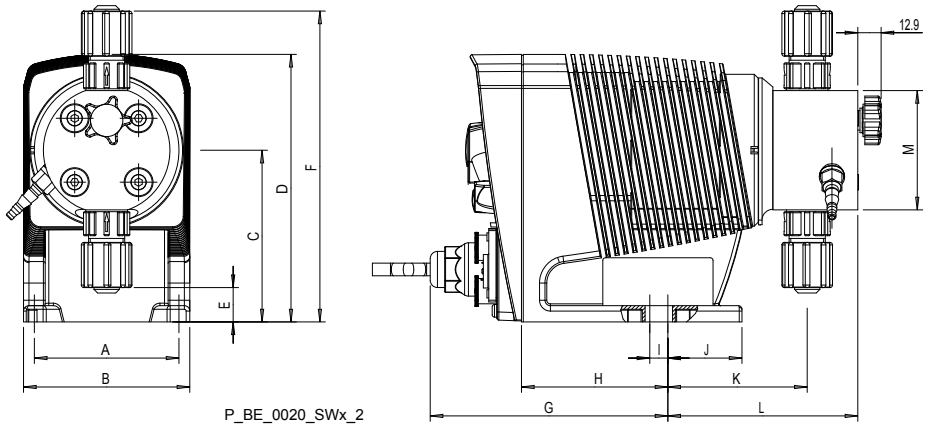

Fig. 20: Dimensional drawing Beta b BT4b/BT5b, material version NP - dimensions in mm

	1000 - 1604	0708 - 0220	2504	1008 - 0420	0232
A	80	80	80	80	80
B	92	92	102	102	102
C	95	95	101	101	101
D	148	148	153	153	153
E	19	7.2	24.6	14	3.2
F	172	182.8	178.4	188	198.8
G	131.5	131.5	148.6	148.6	148.6
H	81	81	100	100	100
I	10	10	15	15	15
J	41	41	36	36	36
K	77	77.5	77.1	74.1	76
L	105	105.5	105.1	102.1	104.5
M	Ø 70	Ø 90	Ø 70	Ø 90	Ø 110

Dimensional drawing Beta b, material version PP and NP SEK

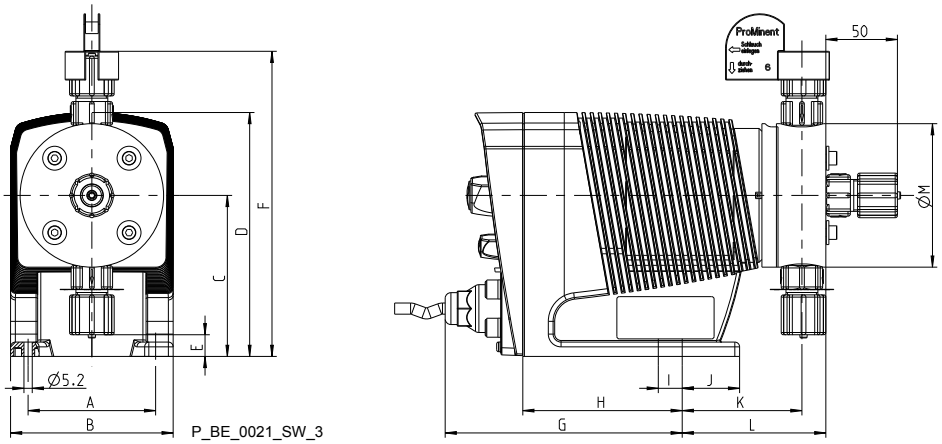

Fig. 21: Dimensional drawing @Beta b BT4b/BT5b, material versions PP and NP with self-bleeding dosing head SEK - dimensions in mm

	1601 - 0401 1602 - 0404	0708 - 0413 0220	1008/0713 0420
A	80	80	80
B	92	92	102
C	95	95	101
D	148	148	153
E	19.1	7.5	13.6
F	170.4	182.4	188.4
G	131.5	131.5	148.6
H	81	81	100
I	10	10	15
J	41	41	36
K	77.1	74.1	74.1
L	92.1	105.5	89.1
M	Ø 70	Ø 90	Ø 90

Dimensional drawing Beta b, material version PV

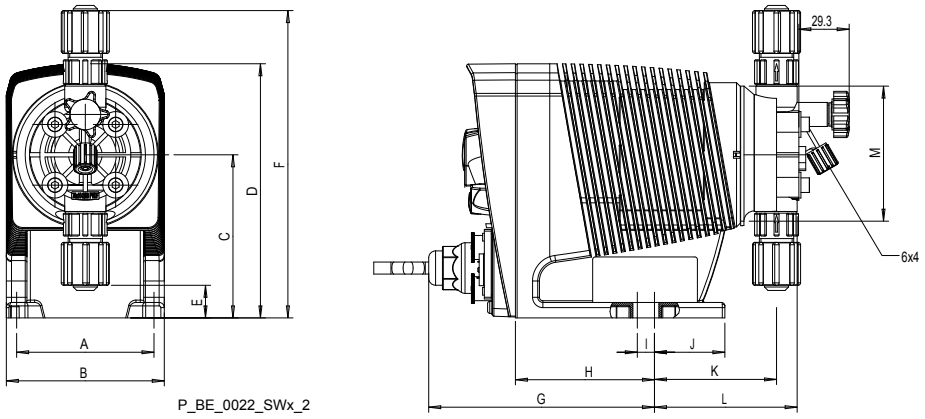

Fig. 22: Dimension drawing Beta b BT4b/BT5b, material version PV - dimensions in mm

	1000 - 0402 1604 - 0404	0708 - 0220	1008 - 0420	0232
A	80	80	80	80
B	92	92	102	102
C	95	95	101	101
D	148	148	153	153
E	19	8.1	14.1	3.2
F	179	185.5	191.5	199
G	131.5	131.5	148.5	148.5
H	81	81	100	100
I	10	10	15	15
J	41	41	36	36
K	71	73	73	76
L	83.1	90	90	93
M	Ø 70	Ø 90	Ø 90	Ø 110

Dimensional drawing Beta b, material version PV HV

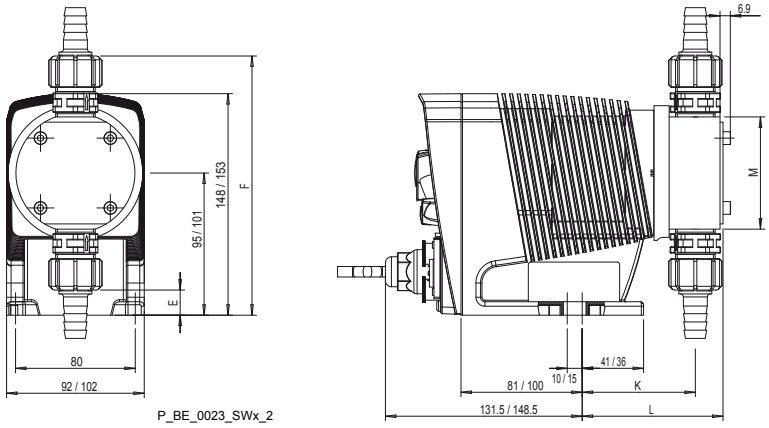

Fig. 23: Dimensional drawing Beta b BT4b/BT5b, material version PV for high-viscosity feed chemicals - dimensions in mm

	1604	0708 - 0413	0220	1008 - 0713	0420
E	17	13	13	22.8	19
F	173	177	177	179.2	183
K	75.5	77	77	75.5	78.5
L	94	95	95	94	96.5
M	Ø 70	Ø 80	Ø 85	Ø 85	Ø 85

Dimensional drawing Beta b, material version TT

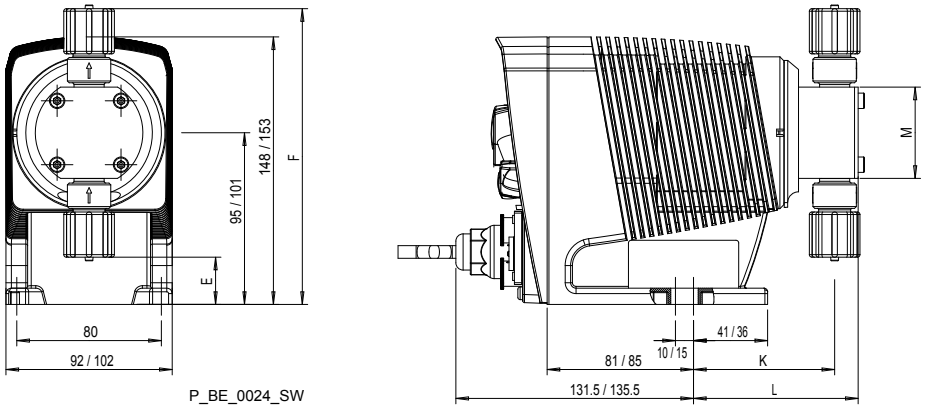

Fig. 24: Dimensional drawing Beta b BT4b/BT5b, material version TT - dimensions in mm

	1000 - 1601	1602 - 1604	0708 - 0220	1008 - 0420	0232
E	26.2	21.3	-13.2	-7.2	-14.2
F	163.7	168.8	202.7	208.7	215.7
K	78	72	77	77.1	78
L	91	86	94	94	97
M	Ø 60	Ø 70	Ø 85	Ø 85	Ø 100

Dimensional drawing Beta b, material version SS

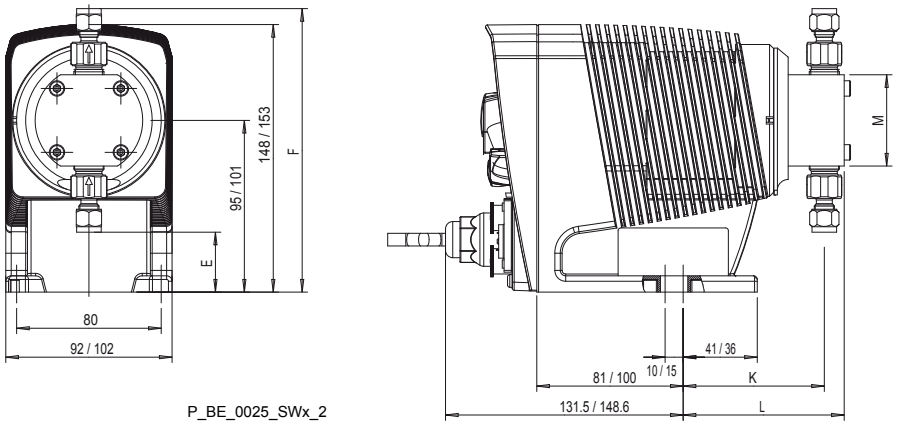

Fig. 25: Dimensional drawing Beta b BT4b/BT5b, material version SS - dimensions in mm

	1000 - 1601	1602 - 1604	0708 - 0220	2504	1008 - 0420	0232
E	33.2	24.4	-7.8	31.7	-1.8	-8
F	156.9	165.6	197.3	170.4	203.3	210
K	78	75	82	72	77	78
L	89	87	97	84	92	95
M	Ø 60	Ø 70	Ø 85	Ø 70	Ø 85	Ø 110

18 Diagrams for setting the capacity

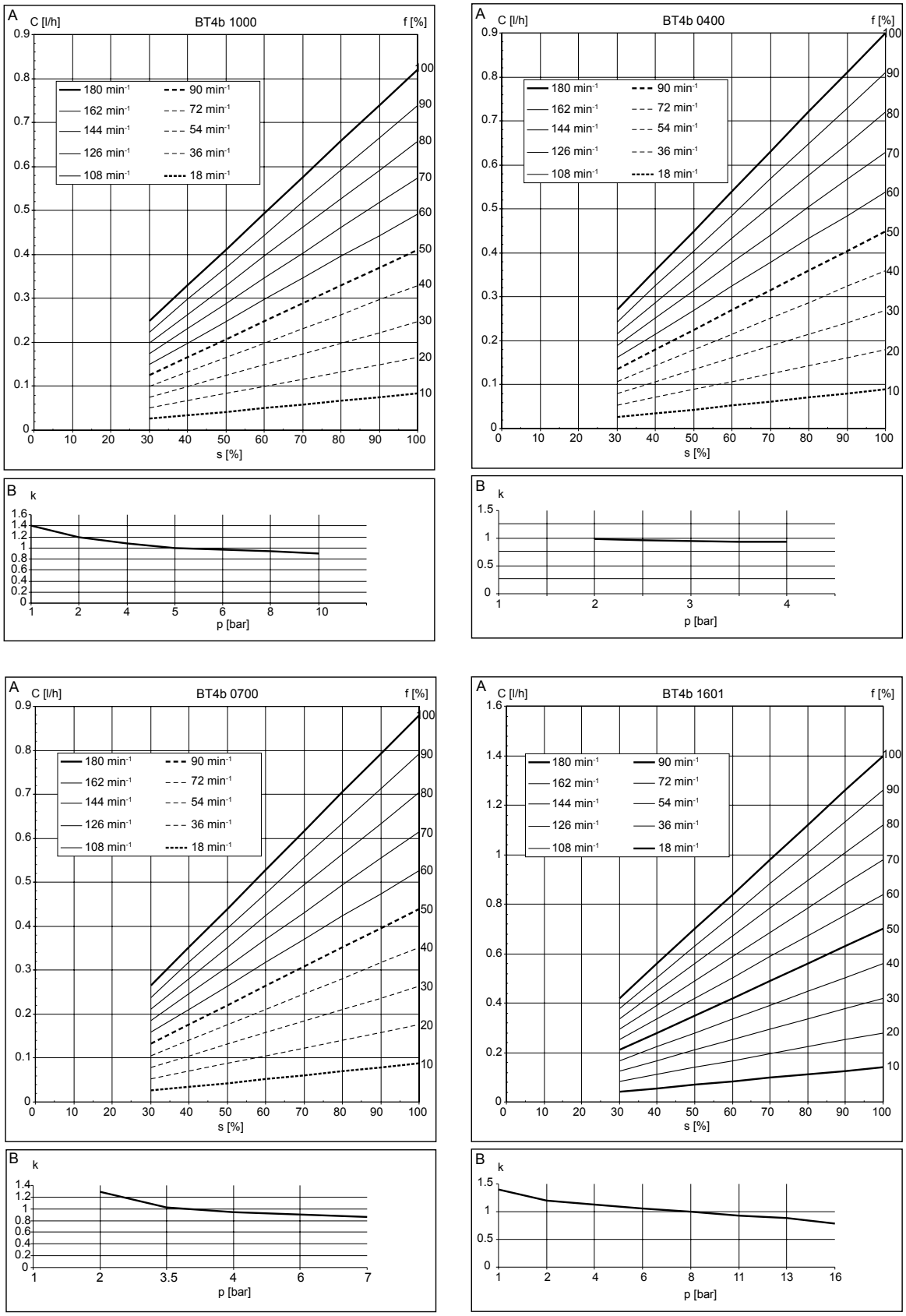

Fig. 26: A) Capacity C at medium back pressure depending on the stroke length s for different stroke rates f. B) Associated correction factors k depending on the back pressure p.

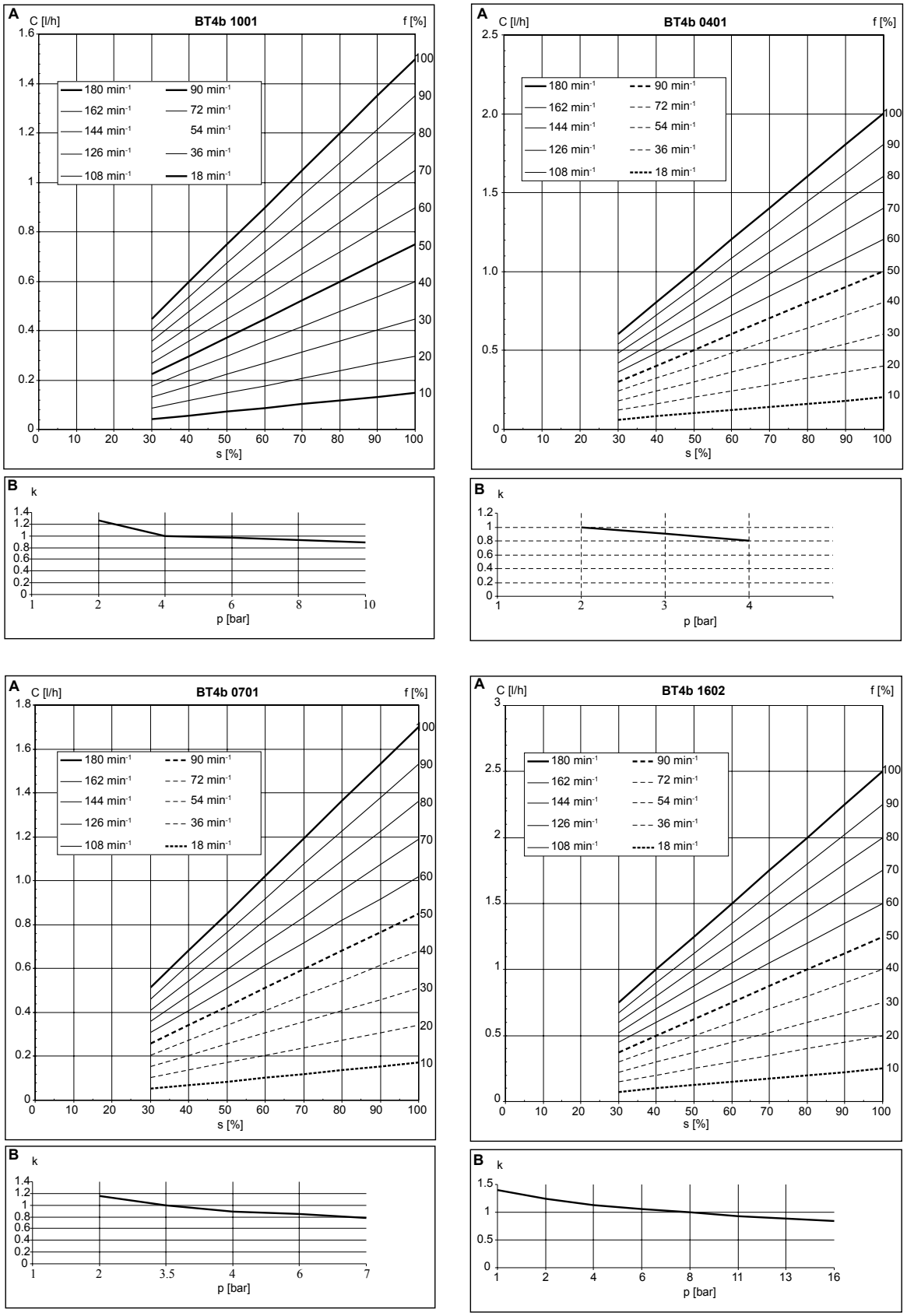

Fig. 27: A) Capacity C at medium back pressure depending on the stroke length s for different stroke rates f. B) Associated correction factors k depending on the back pressure p.

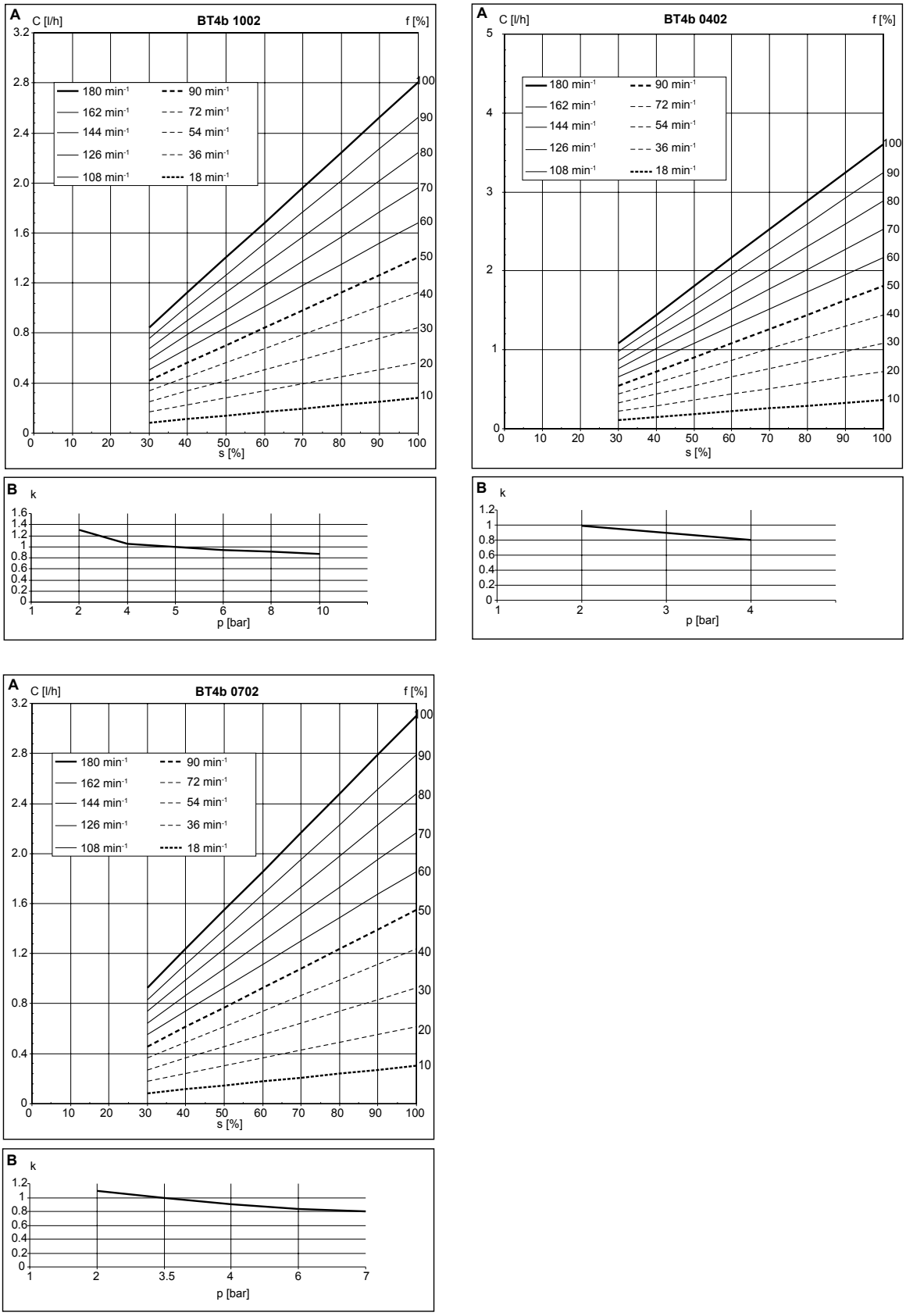

Fig. 28: A) Capacity C at medium back pressure depending on the stroke length s for different stroke rates f. B) Associated correction factors k depending on the back pressure p.

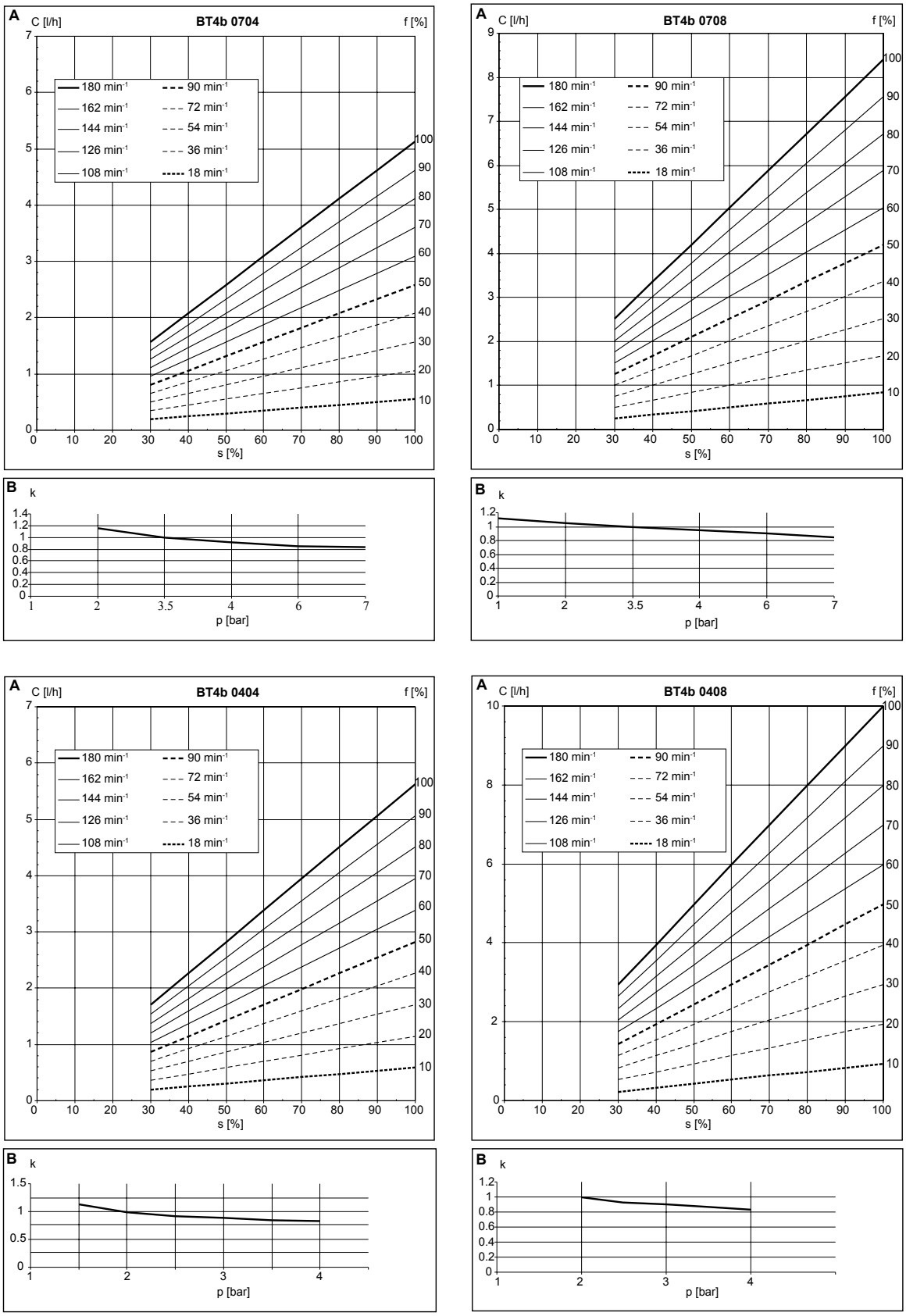

Fig. 29: A) Capacity C at medium back pressure depending on the stroke length s for different stroke rates f. B) Associated correction factors k depending on the back pressure p.

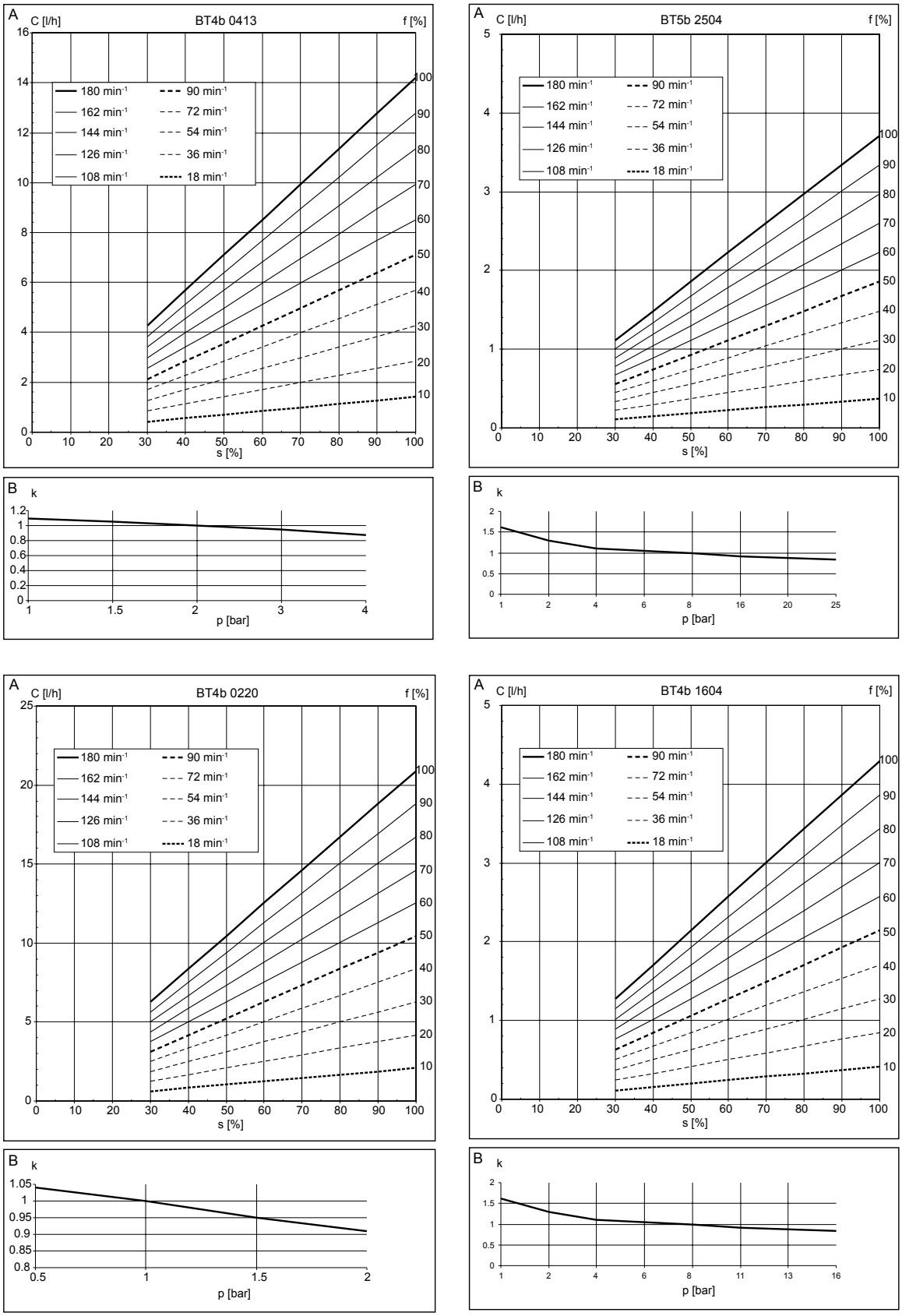

Fig. 30: A) Capacity C at medium back pressure depending on the stroke length s for different stroke rates f. B) Associated correction factors k depending on the back pressure p.

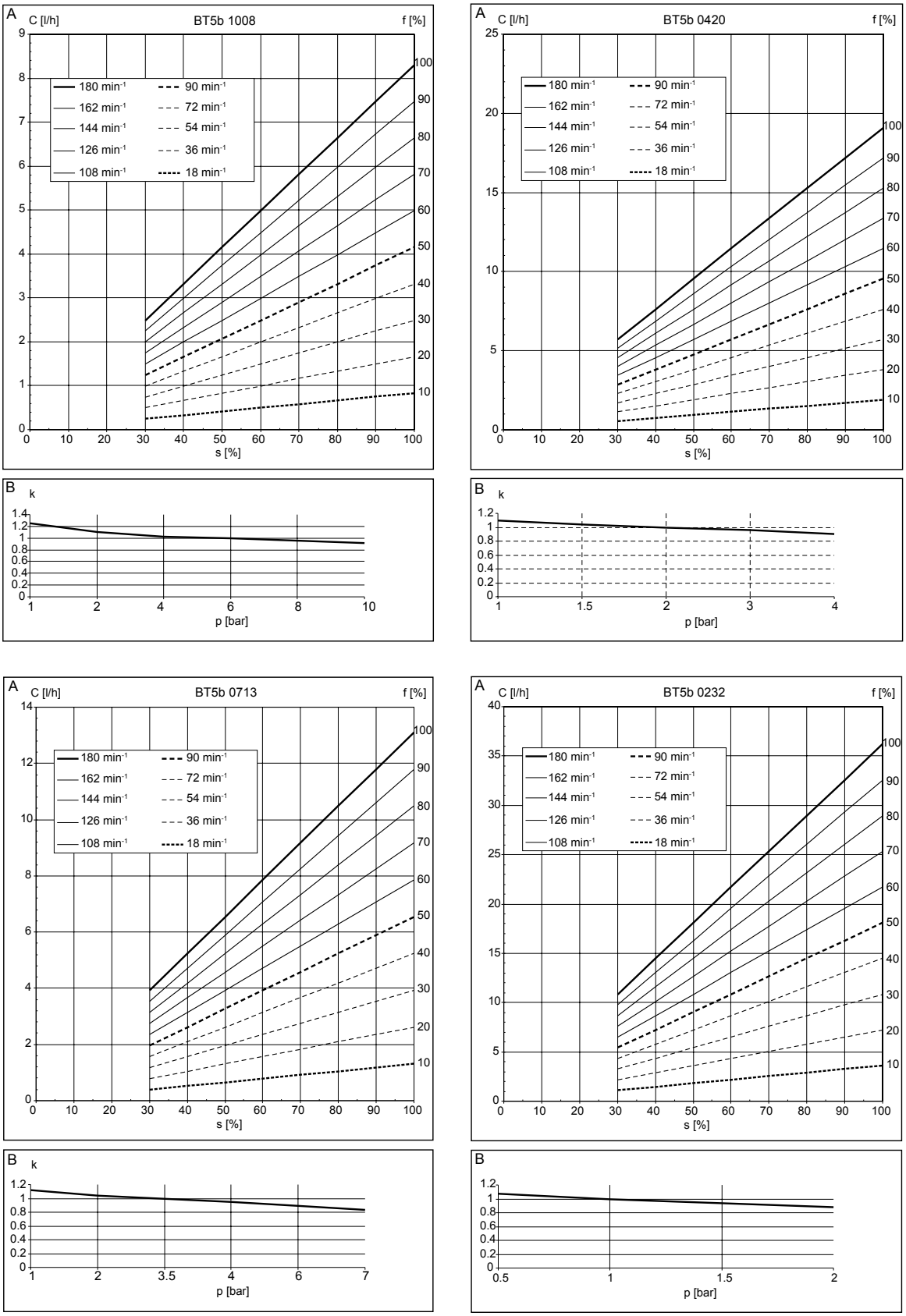

Fig. 31: A) Capacity C at medium back pressure depending on the stroke length s for different stroke rates f. B) Associated correction factors k depending on the back pressure p.

19 Exploded drawings and ordering information

19.1 Exploded drawings

Liquid end Beta b 1000 - 1604 PP_2

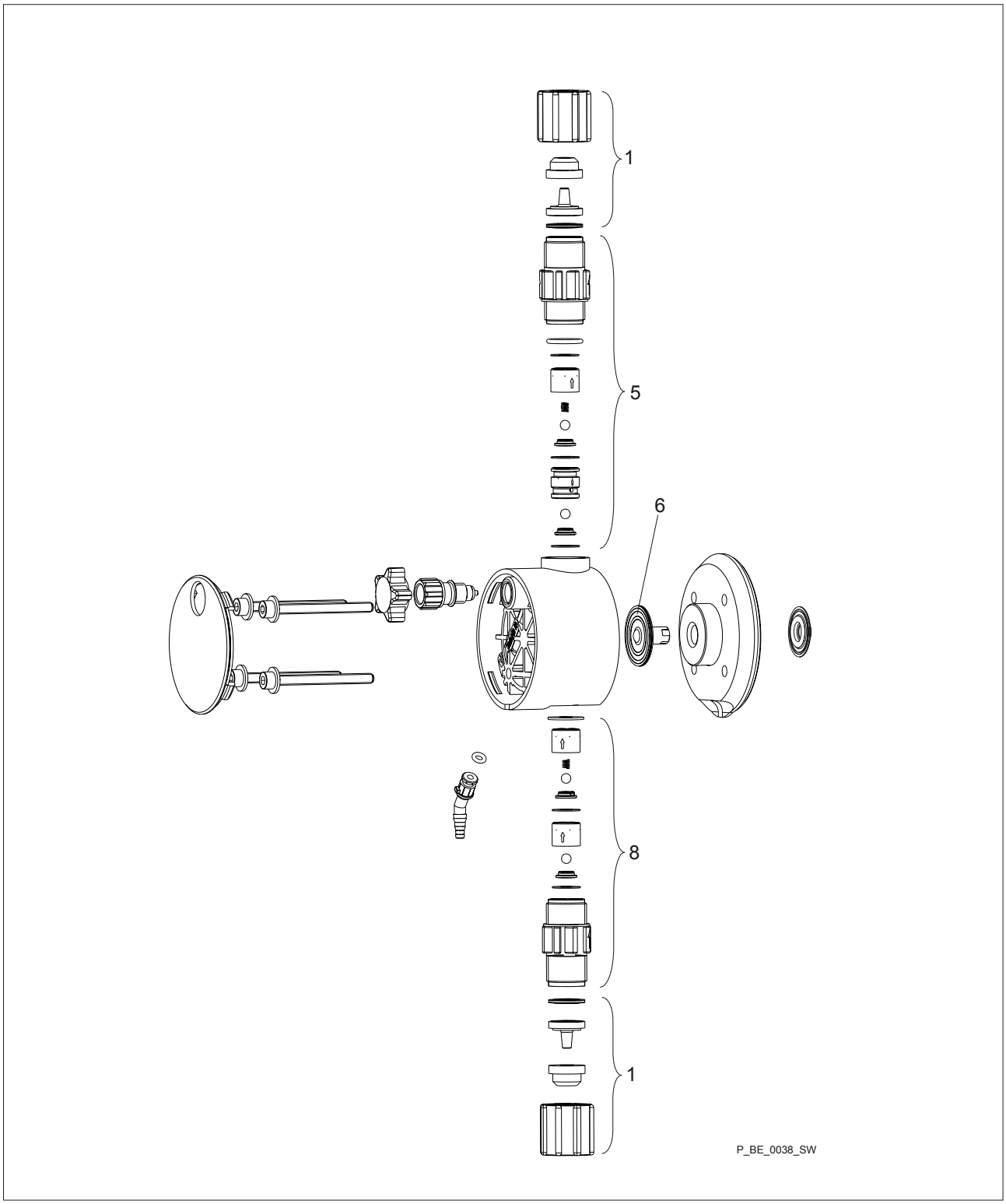

Fig. 32

Tab. 11: Spare parts for liquid end Beta b 1000 - 1604 PP_2

Pos.	Description
1	Connector kit
5	Discharge valve
6	Diaphragm
8	Suction valve

Liquid end Beta b 1000 PP_2

	PPE2	PPB2	PPT2
Liquid end	1002057	1002065	1035317
Spare parts kit	1001644	1001652	1023107
Diaphragm	1000244	1000244	1000244

Liquid end Beta b 1601 PP_2

	PPE2	PPB2	PPT2
Liquid end	1002058	1002066	1035318
Spare parts kit	1001645	1001653	1023108
Diaphragm	1000245	1000245	1000245

Liquid end Beta b 1602 PP_2

	PPE2	PPB2	PPT2
Liquid end	1002059	1002067	1035319
Spare parts kit	1001646	1001654	1023109
Diaphragm	1000246	1000246	1000246

Liquid end Beta b 1604 PP_2

	PPE2	PPB2	PPT2
Liquid end	1039994	1039993	1035320
Spare parts kit	1039989	1039987	1035332
Diaphragm	1034612	1034612	1034612

Liquid end Beta b 0708 (1008) - 0220 (0420) PP_2

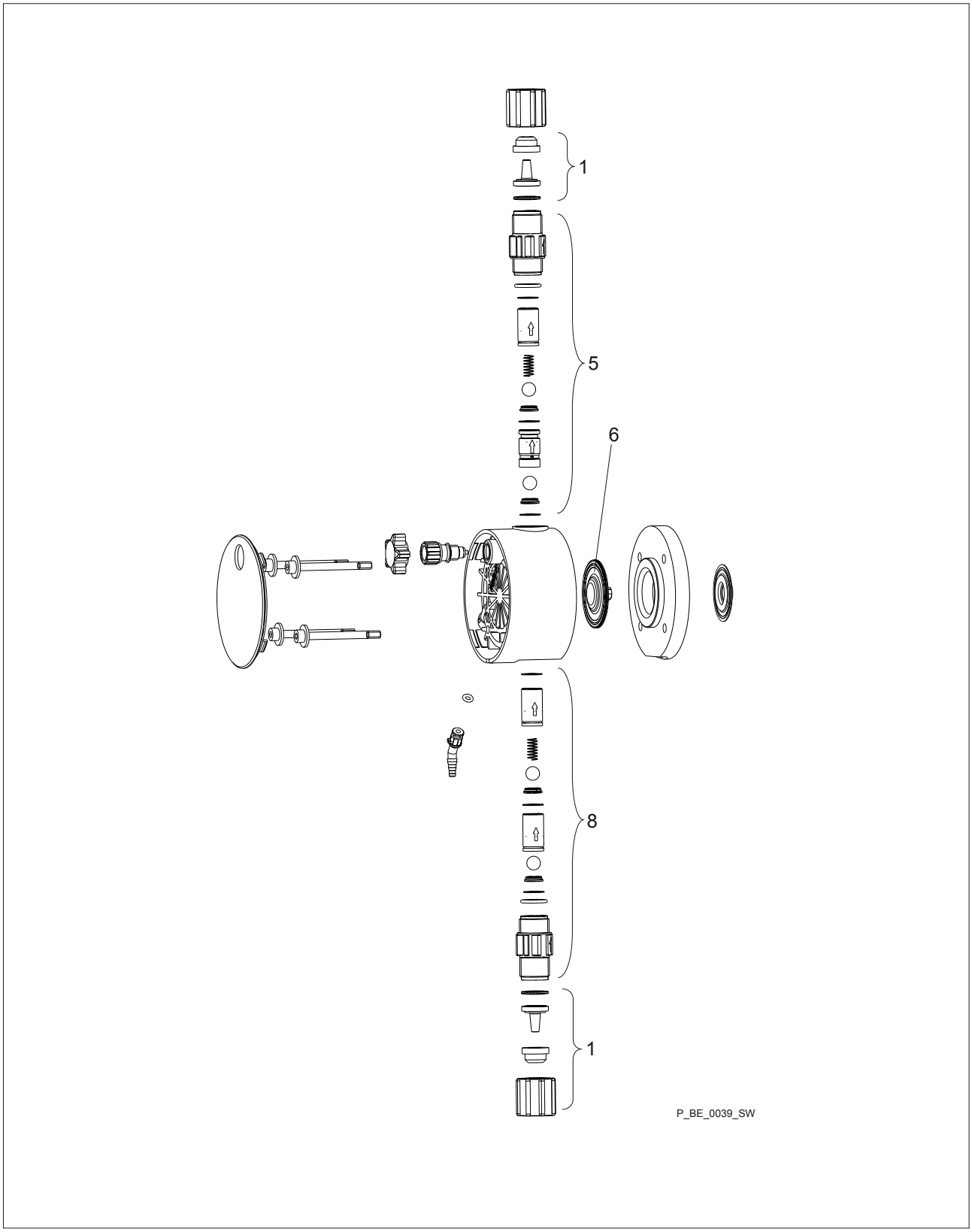

Fig. 33

Tab. 12: Spare parts for liquid end Beta b 0708 (1008) - 0220 (0420) PP_2

Pos.	Description
1	Connector kit
5	Discharge valve
6	Diaphragm
8	Suction valve

Liquid end Beta b 0708 (1008) PP_2

	PPE2	PPB2	PPT2
Liquid end	1002061	1002069	1035321
Spare parts kit	1001648	1001656	1023111
Diaphragm	1000248	1000248	1000248

Liquid end Beta b 0413 (0713) PP_2

	PPE2	PPB2	PPT2
Liquid end	1002062	1002070	1035322
Spare parts kit	1001649	1001657	1023112
Diaphragm	1000249	1000249	1000249

Liquid end Beta b 0220 (0420) PP_2

	PPE2	PPB2	PPT2
Liquid end	1002063	1002071	1035323
Spare parts kit	1001650	1001685	1023113
Diaphragm	1000250	1000250	1000250

Liquid end Beta b 0232 PP_0

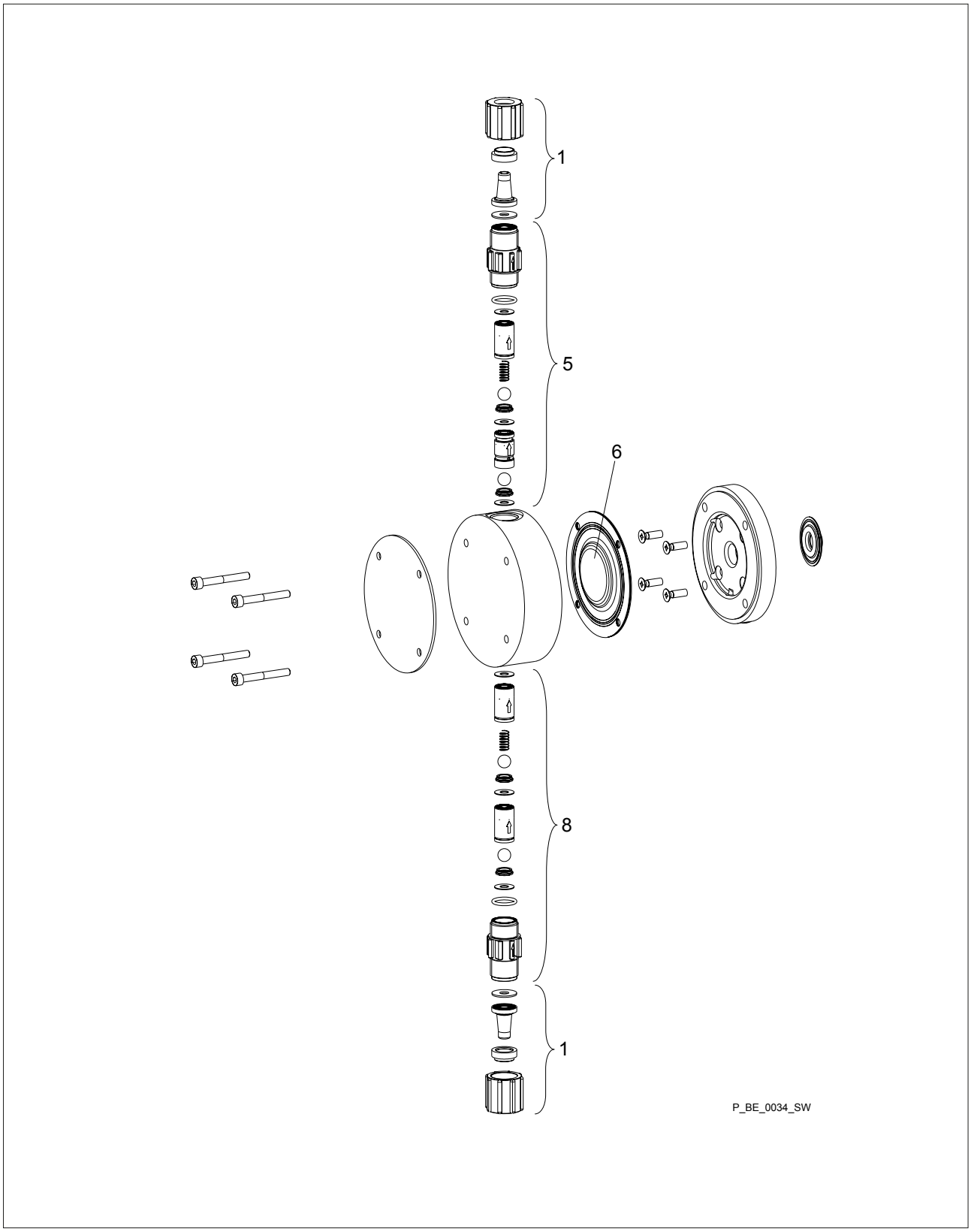

Fig. 34

Tab. 13: Spare parts kit for liquid end Beta b 0232 PP_0

Pos.	Description
1	Connector kit
5	Discharge valve
6	Diaphragm
8	Suction valve

Liquid end Beta b 0232

	PPE0	PPB0	PPT0
Liquid end	1002064	1002072	1035324
Spare parts kit	1001651	1001659	1023124
Diaphragm	1000251	1000251	1000251

Liquid end Beta b 1000 - 1604 NP_0 and NP_2

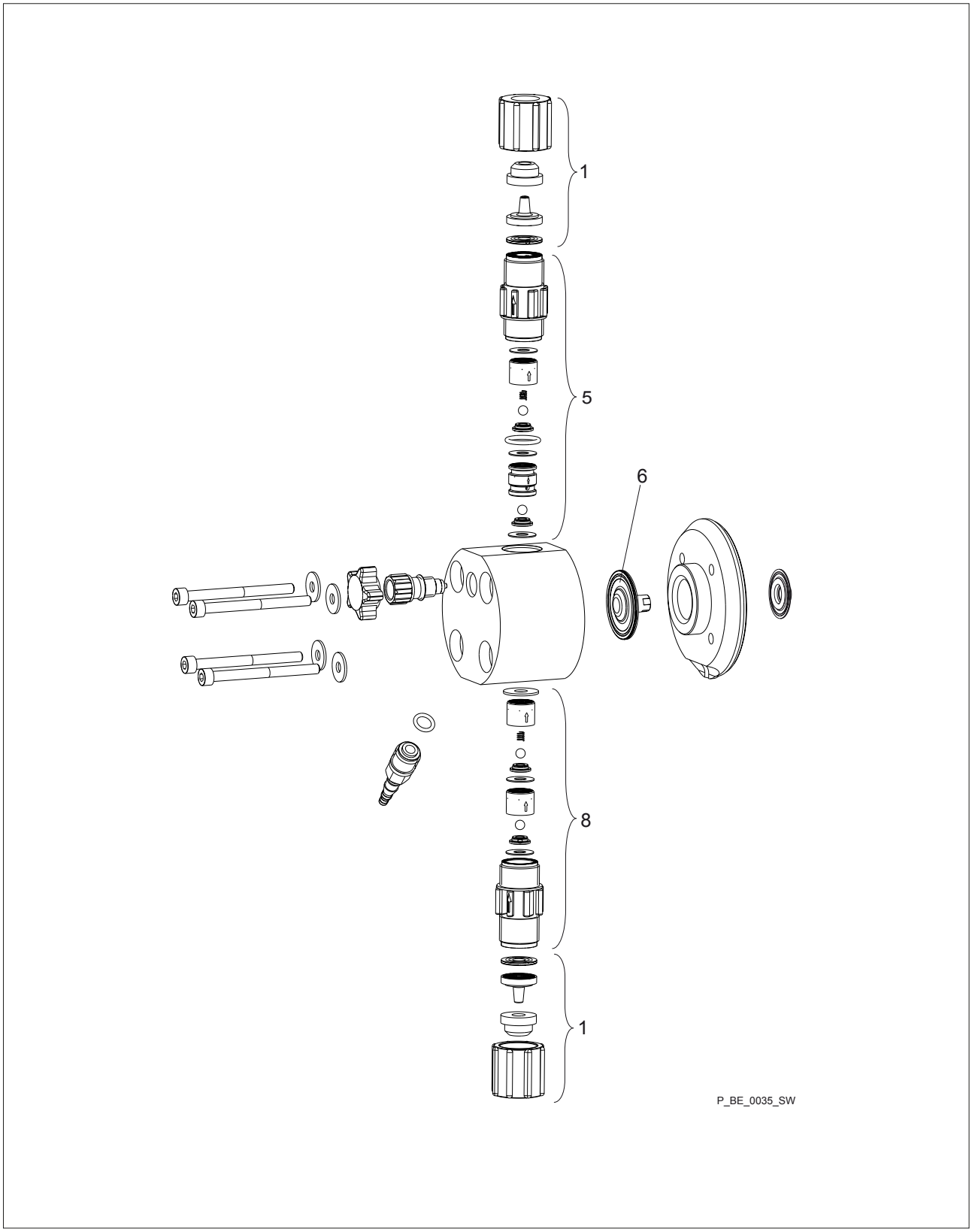

Fig. 35

Tab. 14: Spare parts for liquid end Beta b 1000 - 1604 NP NP_0 and NP_2

Pos.	Description
1	Connector kit
5	Discharge valve
6	Diaphragm
8	Suction valve

Liquid end Beta b 1000

	NPE_	NPB_	NPT_
Liquid end with bleed valve, _2	1002193	1002201	1034560
Liquid end without bleed valve, _0	1002073	1002084	1034568
Spare parts kit	1001713	1001721	1023107
Diaphragm	1000244	1000244	1000244

Liquid end Beta b 1601

	NPE_	NPB_	NPT_
Liquid end with bleed valve, _2	1002194	1002202	1034561
Liquid end without bleed valve, _0	1002074	1002085	1034569
Spare parts kit	1001714	1001722	1023108
Diaphragm	1000245	1000245	1000245

Liquid end Beta b 1602

	NPE_	NPB_	NPT_
Liquid end with bleed valve_2	1002195	1002203	1034562
Liquid end without bleed valve, _0	1002075	1002086	1034570
Spare parts kit	1001715	1001723	1023109
Diaphragm	1000246	1000246	1000246

Liquid end Beta b 1604

	NPE_	NPB_	NPT_
Liquid end with bleed valve, _2	1039996	1039992	1034563
Liquid end without bleed valve, _0	1039991	1039995	1034571
Spare parts kit	1039988	1039986	1035332
Diaphragm	1034612	1034612	1034612

Liquid end Beta b 0708 (1008) - 0220 (0420) NP_0 and NP_2

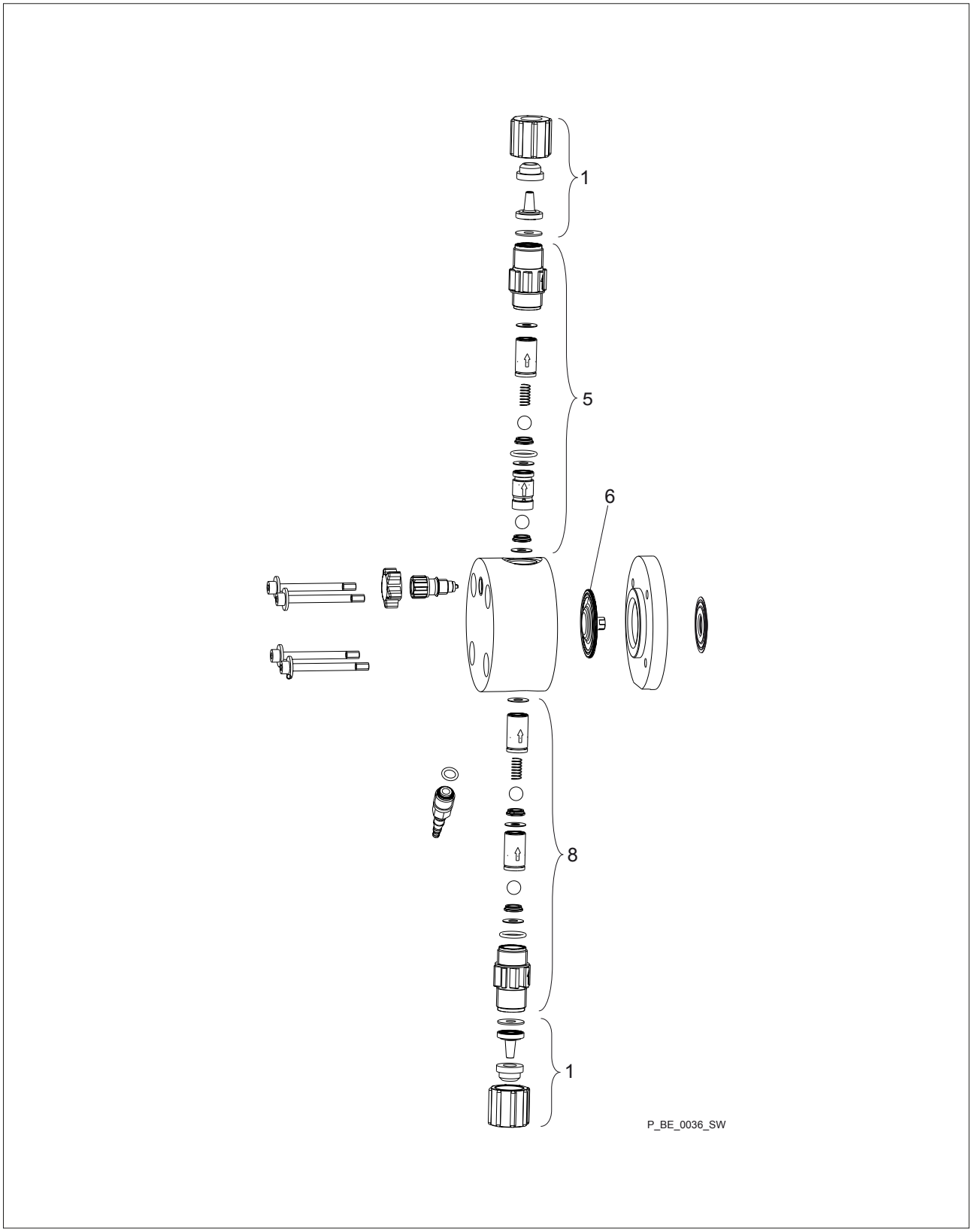

Fig. 36

Tab. 15: Spare parts for liquid end Beta b 0708 (1008) - 0220 (0420) NP_0 and NP_2

Pos.	Description
1	Connector kit
5	Discharge valve
6	Diaphragm
8	Suction valve

Liquid end Beta b 0708 (1008)

	NPE_	NPB_	NPT_
Liquid end with bleed valve, _2	1002197	1002205	1034564
Liquid end without bleed valve, _0	1002077	1002088	1034573
Spare parts kit	1001717	1001725	1023111
Diaphragm	1000248	1000248	1000248

Liquid end Beta b 0413 (0713)

	NPE_	NPB_	NPT_
Liquid end with bleed valve, _2	1002198	1002206	1034565
Liquid end without bleed valve, _0	1002078	1002089	1034578
Spare parts kit	1001718	1001726	1023112
Diaphragm	1000249	1000249	1000249

Liquid end Beta b 0220 (0420)

	NPE_	NPB_	NPT_
Liquid end with bleed valve, _2	1002199	1002207	1034566
Liquid end without bleed valve, _0	1002079	1002090	1034579
Spare parts kit	1001719	1001727	1023113
Diaphragm	1000250	1000250	1000250

Liquid end Beta b 0232 NP_0 and NP_2

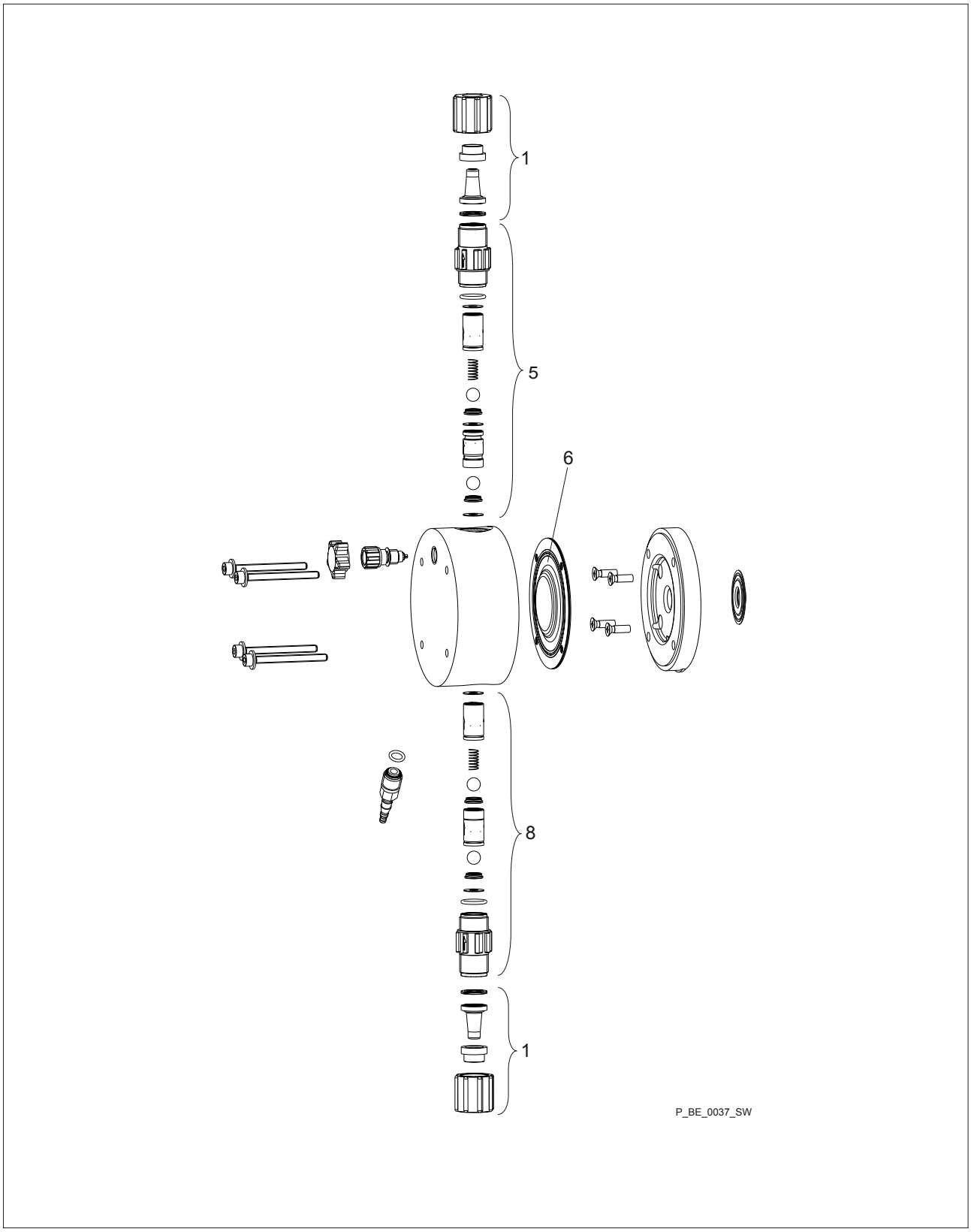

Fig. 37

Tab. 16: Spare parts for liquid end Beta b 0232 NPT0 and NPT2

Pos.	Description
1	Connector kit
5	Discharge valve
6	Diaphragm
8	Suction valve

Liquid end Beta b 0232

	NPE_	NPB_	NPT_
Liquid end with bleed valve, _2	1002200	1002208	1034567
Liquid end without bleed valve, _0	1002080	1002091	1034580
Spare parts kit	1001720	1001728	1023124
Diaphragm	1000251	1000251	1000251

Liquid end Beta b 1000 - 1604 PV_2

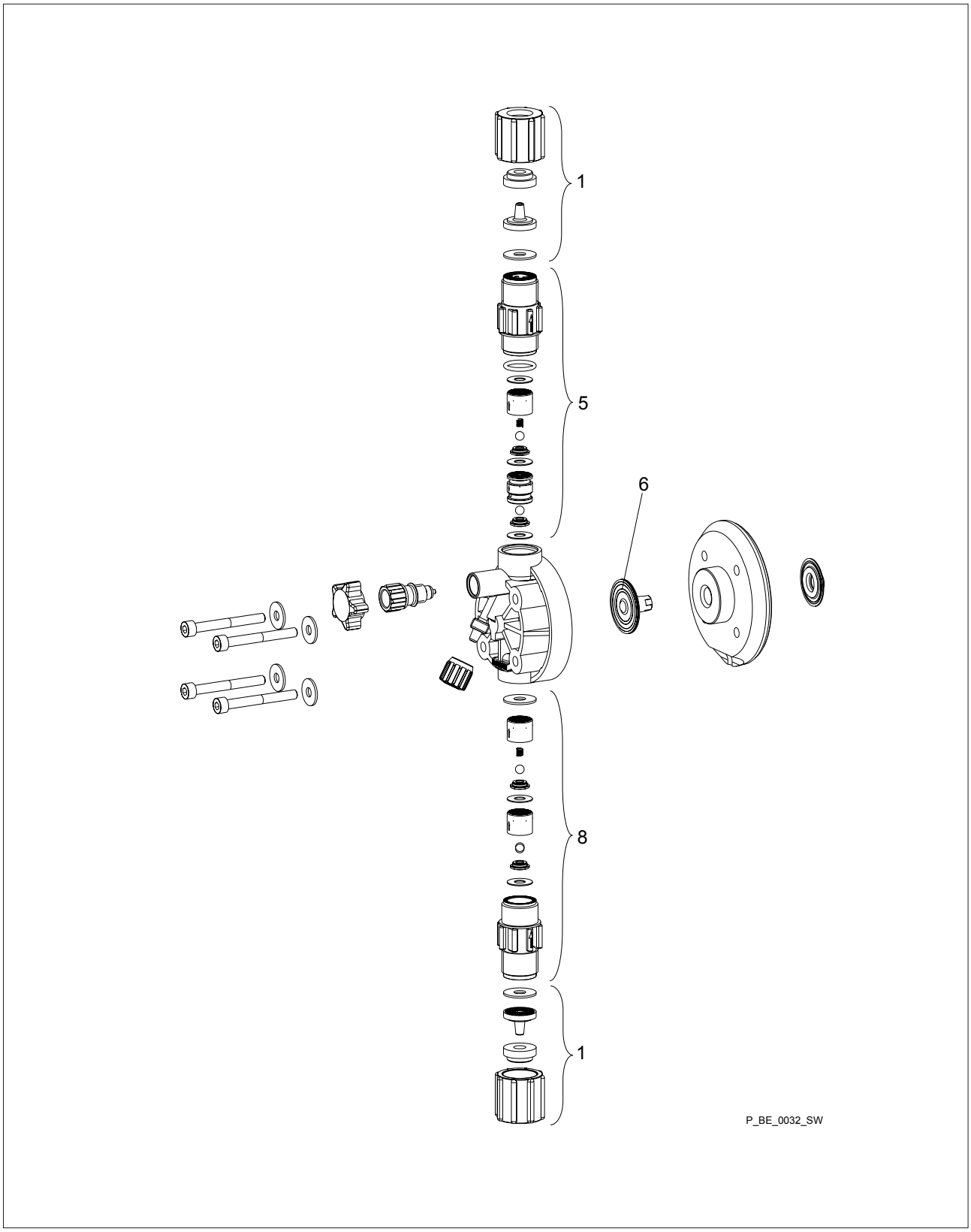

Fig. 38

Tab. 17: Spare parts for liquid end Beta b 1000 - 1604 PV_2

Pos.	Description
1	Connector kit
5	Discharge valve
6	Diaphragm
8	Suction valve

Liquid end Beta b 1000

	PVT2
Liquid end	1023134
Spare parts kit	1023107
Diaphragm	1000244

Liquid end Beta b 1601

	PVT2
Liquid end	1023135
Spare parts kit	1023108
Diaphragm	1000245

Liquid end Beta b 1602

	PVT2
Liquid end	1023136
Spare parts kit	1023109
Diaphragm	1000246

Liquid end Beta b 1604

	PVT2
Liquid end	1035298
Spare parts kit	1035332
Diaphragm	1034612

Liquid end Beta b 0708 (1008) - 0220 (0420) PV_2

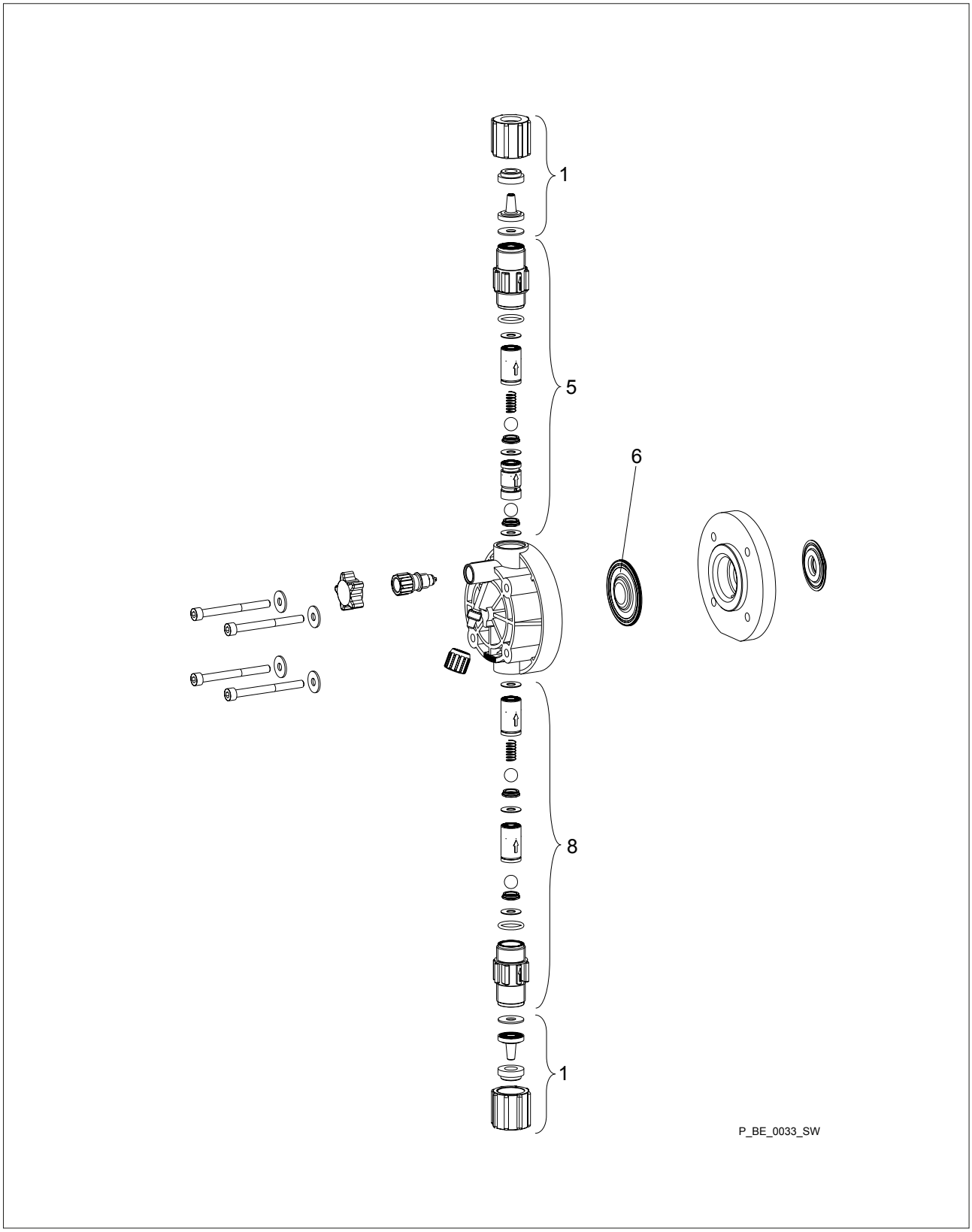

Fig. 39

Tab. 18: Spare parts for liquid end Beta b 0708 (1008) - 0220 (0420) PV_2

Pos.	Description
1	Connector kit
5	Discharge valve
6	Diaphragm
8	Suction valve

Liquid end Beta b 0708 (1008)

	PVT2
Liquid end	1023138
Spare parts kit	1023111
Diaphragm	1000248

Liquid end Beta b 0413 (0713)

	PVT2
Liquid end	1023139
Spare parts kit	1023112
Diaphragm	1000249

Liquid end Beta b 0220 (0420)

	PVT2
Liquid end	1023140
Spare parts kit	1023113
Diaphragm	1000250

Liquid end Beta b 0232 PV_0

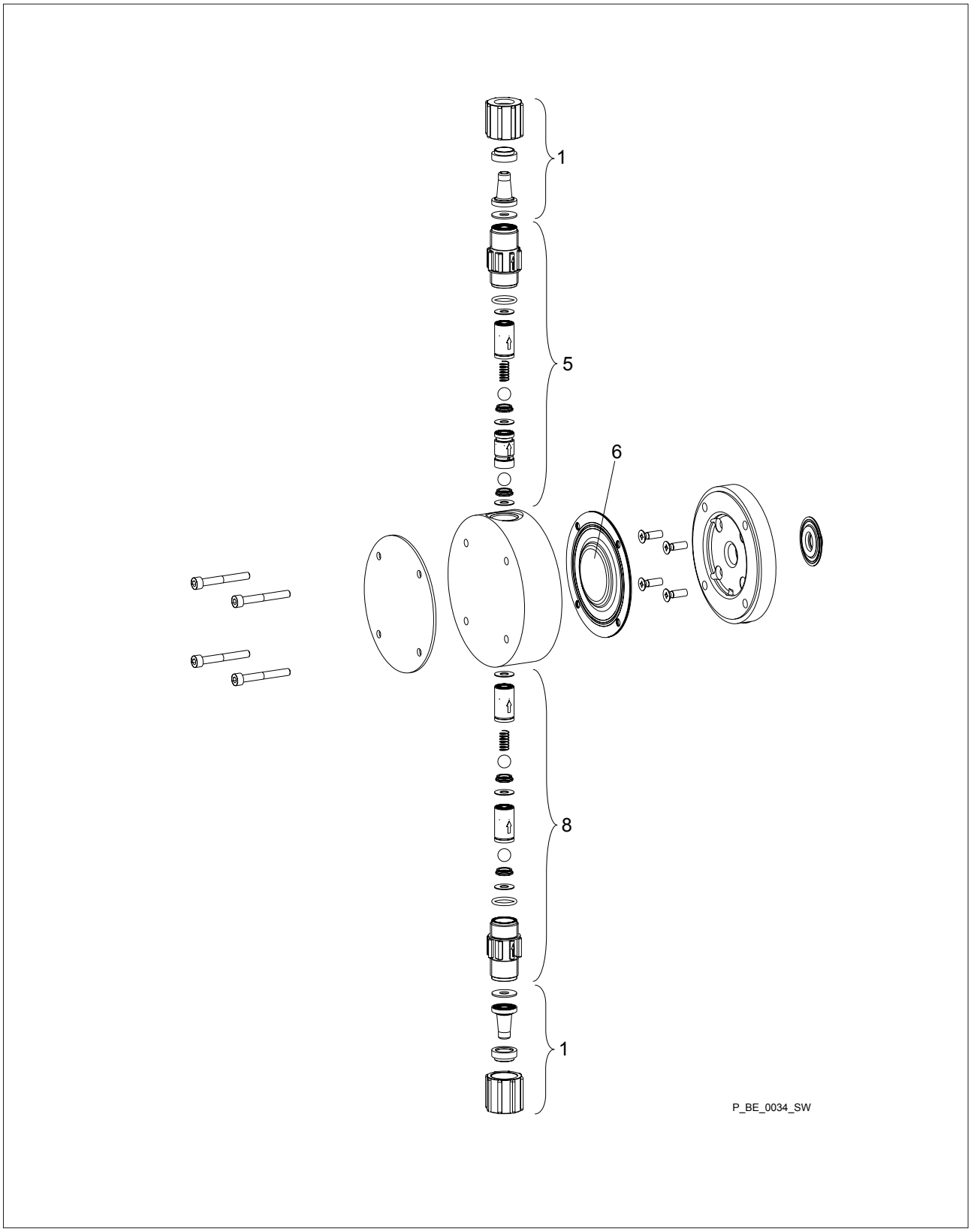

Fig. 40

Tab. 19: Spare parts kit for liquid end Beta b 0232 PV_0

Pos.	Description
1	Connector kit
5	Discharge valve
6	Diaphragm
8	Suction valve

Liquid end Beta b 0232

	PV_0
Liquid end	1023141
Spare parts kit	1023124
Diaphragm	1000251

Liquid end Beta b 1604 - 0220 (0420)
PV_4

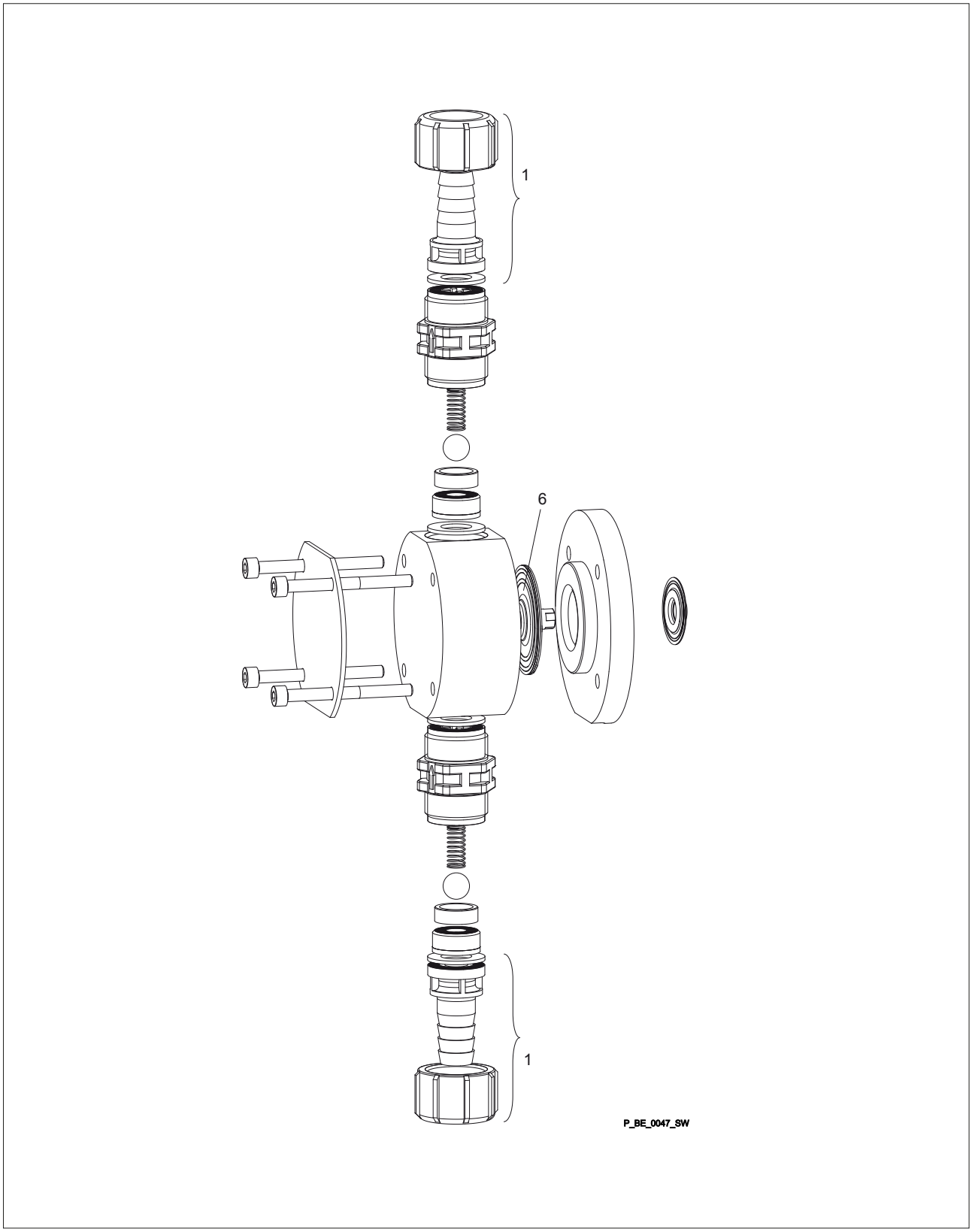

Fig. 41

Tab. 20: Spare parts kit for liquid end Beta b 1604 - 0220 (0420) PV_4

Pos.	Description
1	Connector kit with hose nozzle
6	Diaphragm

Liquid end Beta b 1604

	PV_4
Liquid end	1035326
Spare parts kit	1035342
Diaphragm	1034612

Liquid end Beta b 0708 (1008)

	PV_4
Liquid end	1018073
Spare parts kit	1019067
Diaphragm	1000248

Liquid end Beta b 0413 (0713)

	PV_4
Liquid end	1018084
Spare parts kit	1019069
Diaphragm	1000249

Liquid end Beta b 0220 (0420)

	PV_4
Liquid end	1018085
Spare parts kit	1019070
Diaphragm	1000250

Liquid end Beta b 1000 - 1604 TTT0

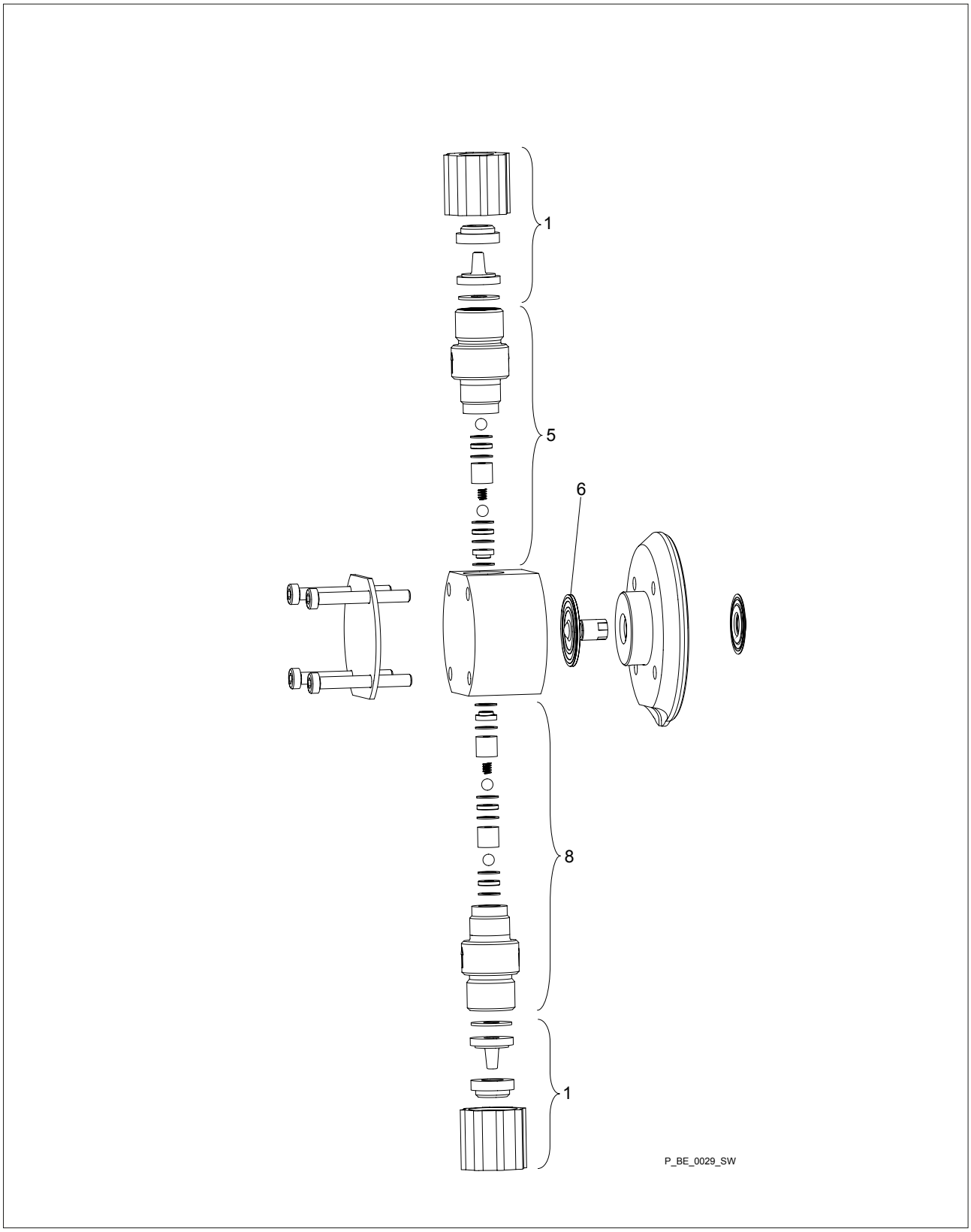

Fig. 42

Tab. 21: Spare parts for liquid end Beta b 1000 - 1604 TTT0

Pos.	Description
1	Connector kit
5	Discharge valve
6	Diaphragm
8	Suction valve

Liquid end Beta b 1000

	TTT0
Liquid end	1002345
Spare parts kit	1001737
Diaphragm	1000244

Liquid end Beta b 1601

	TTT0
Liquid end	1002346
Spare parts kit	1001738
Diaphragm	1000245

Liquid end Beta b 1602

	TTT0
Liquid end	1002347
Spare parts kit	1001739
Diaphragm	1000246

Liquid end Beta b 1604

	TTT0
Liquid end	1034582
Spare parts kit	1035330
Diaphragm	1034612

Liquid end Beta b 0708 (1008) - 0220
(0420) TTT0

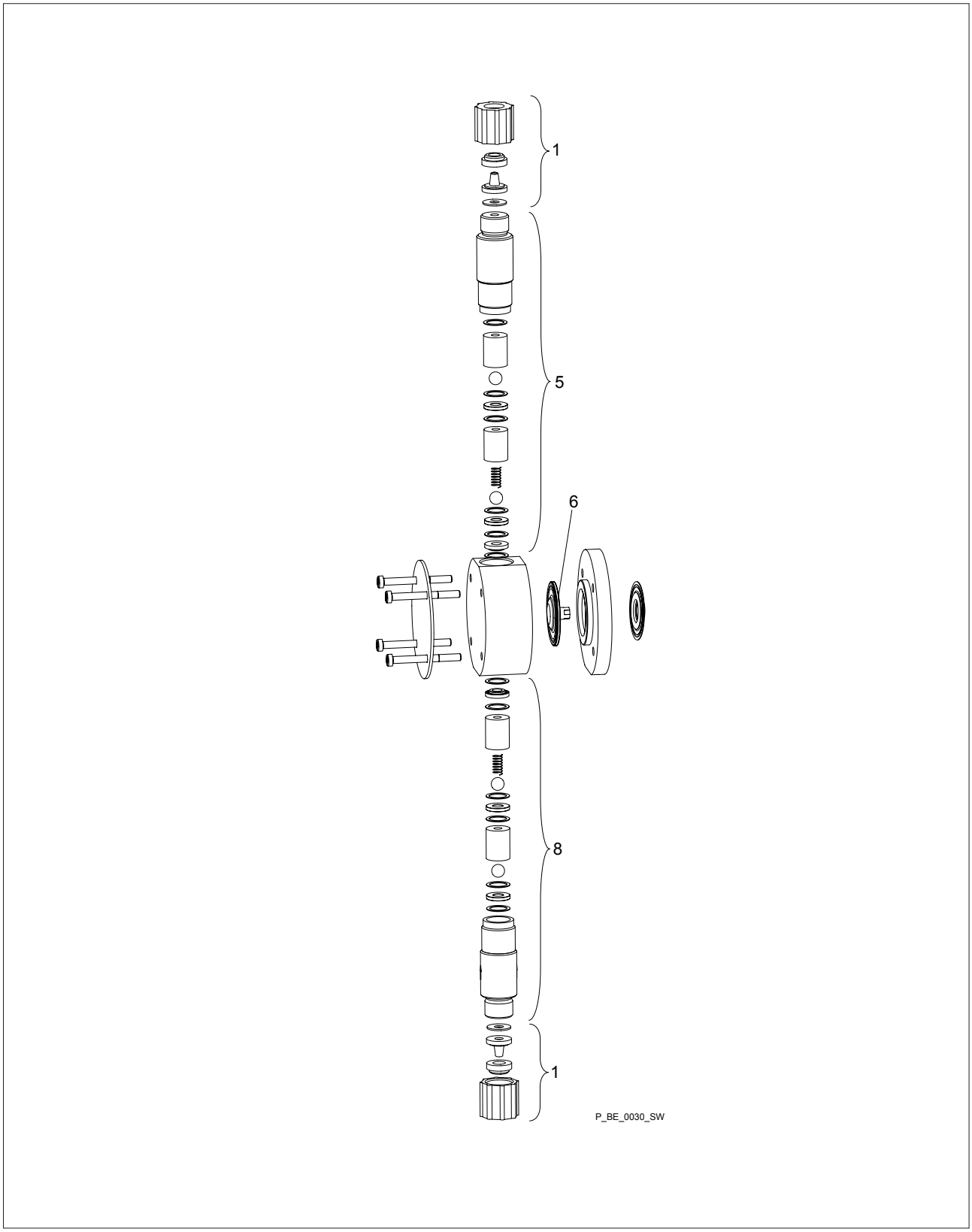

Fig. 43

Tab. 22: Liquid end Beta b 0708 (1008) - 0220 (0420) TTT0

Pos.	Description
1	Connector kit
5	Discharge valve
6	Diaphragm
8	Suction valve

Liquid end Beta b 0708 (1008)

	TTT0
Liquid end	1002349
Spare parts kit	1001741
Diaphragm	1000248

Liquid end Beta b 0413 (0713)

	TTT0
Liquid end	1002350
Spare parts kit	1001742
Diaphragm	1000249

Liquid end Beta b 0220 (0420)

	TTT0
Liquid end	1002351
Spare parts kit	1001754
Diaphragm	1000250

Liquid end Beta b 0232 TTT0

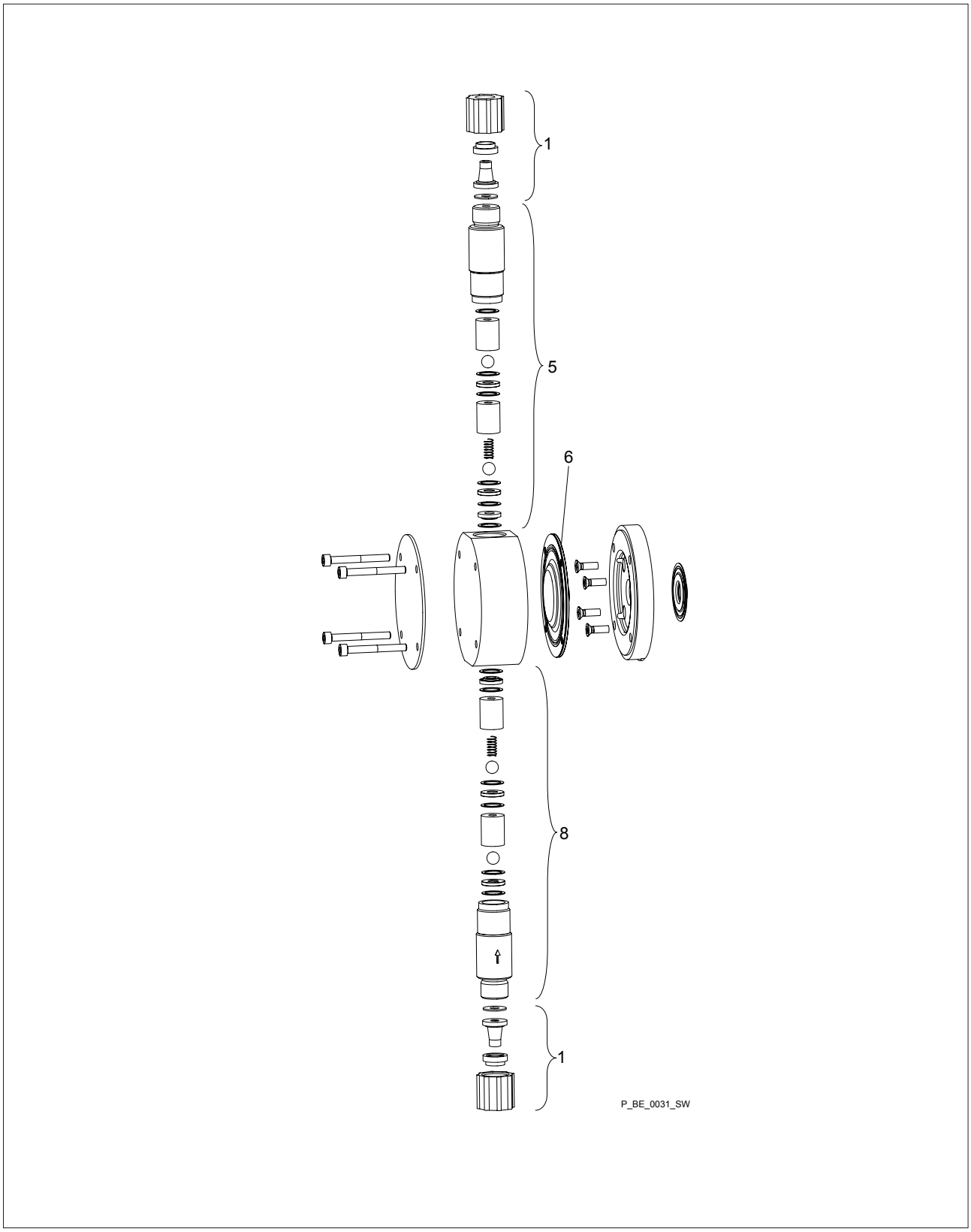

Fig. 44

Tab. 23: Spare parts kit for liquid end Beta b 0232 TTT0

Pos.	Description
1	Connector kit
5	Discharge valve
6	Diaphragm
8	Suction valve

Liquid end Beta b 0232

	TTT0
Liquid end	1002352
Spare parts kit	1001755
Diaphragm	1000251

Liquid end Beta b 1000 - 1604 SS_0

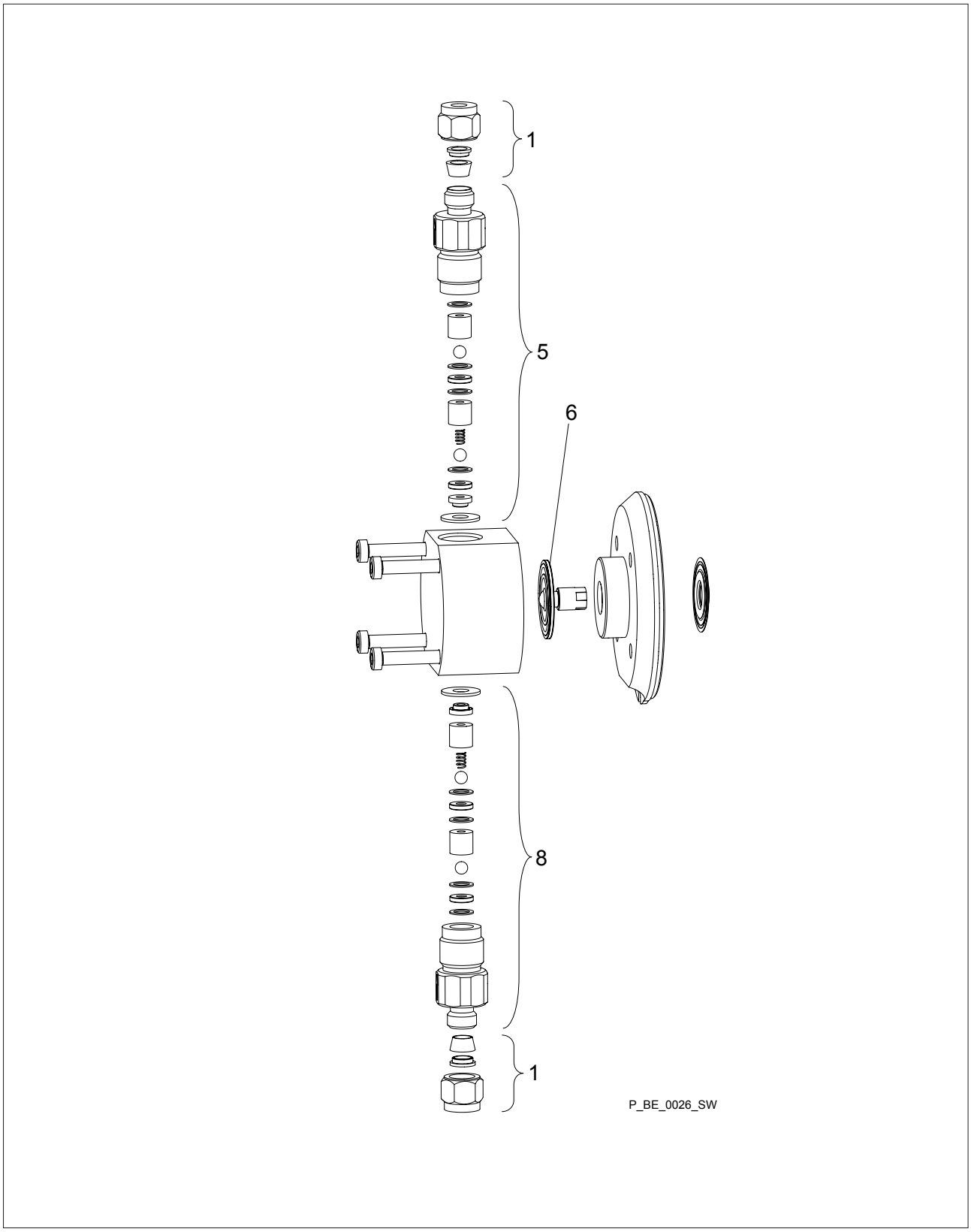

Fig. 45

Tab. 24: Spare parts for liquid end Beta b 1000 - 1604 SS_0

Pos.	Description
1	Connector kit
5	Discharge valve
6	Diaphragm
8	Suction valve

Liquid end Beta b 1000

	SST0
Liquid end	1002337
Spare parts kit	1001729
Diaphragm	1000244

Liquid end Beta b 1601

	SST0
Liquid end	1002338
Spare parts kit	1001730
Diaphragm	1000245

Liquid end Beta b 1602

	SST0
Liquid end	1002339
Spare parts kit	1001731
Diaphragm	1000246

Liquid end Beta b 1604

	SST0
Liquid end	1034581
Spare parts kit	1035331
Diaphragm	1034612

Liquid end Beta b 0708 (1008) - 0220 (0420) SS_0

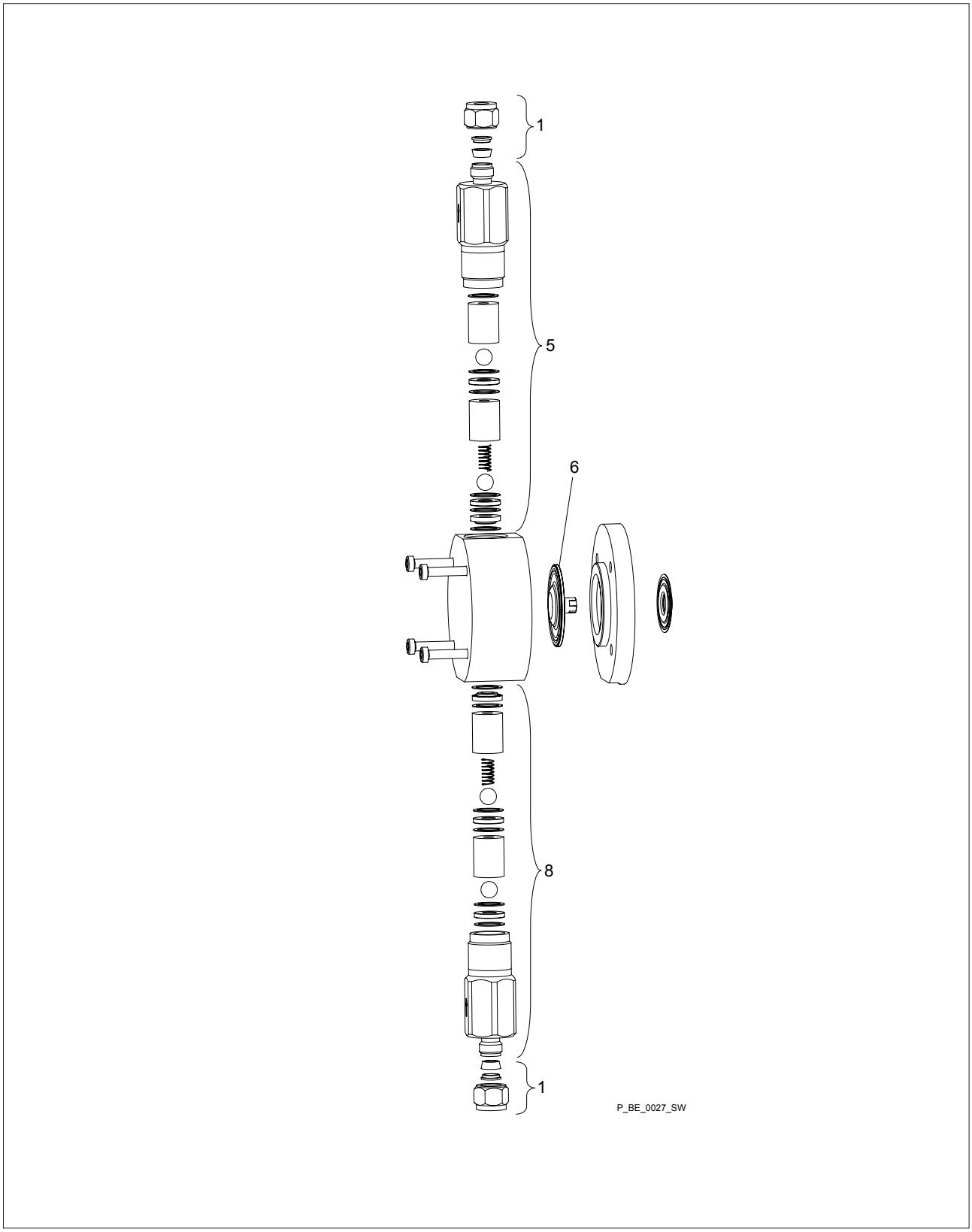

Fig. 46

Tab. 25: Spare parts for liquid end Beta b 0708 (1008) - 0220 (0420) SS_0

Pos.	Description
1	Connector kit
5	Discharge valve
6	Diaphragm
8	Suction valve

Liquid end Beta b 0708 (1008)

	SST0
Liquid end	1002341
Spare parts kit	1001733
Diaphragm	1000248

Liquid end Beta b 0413 (0713)

	SST0
Liquid end	1002342
Spare parts kit	1001734
Diaphragm	1000249

Liquid end Beta b 0220 (0420)

	SST0
Liquid end	1002343
Spare parts kit	1001735
Diaphragm	1000250

Liquid end Beta b 0232 SS_0

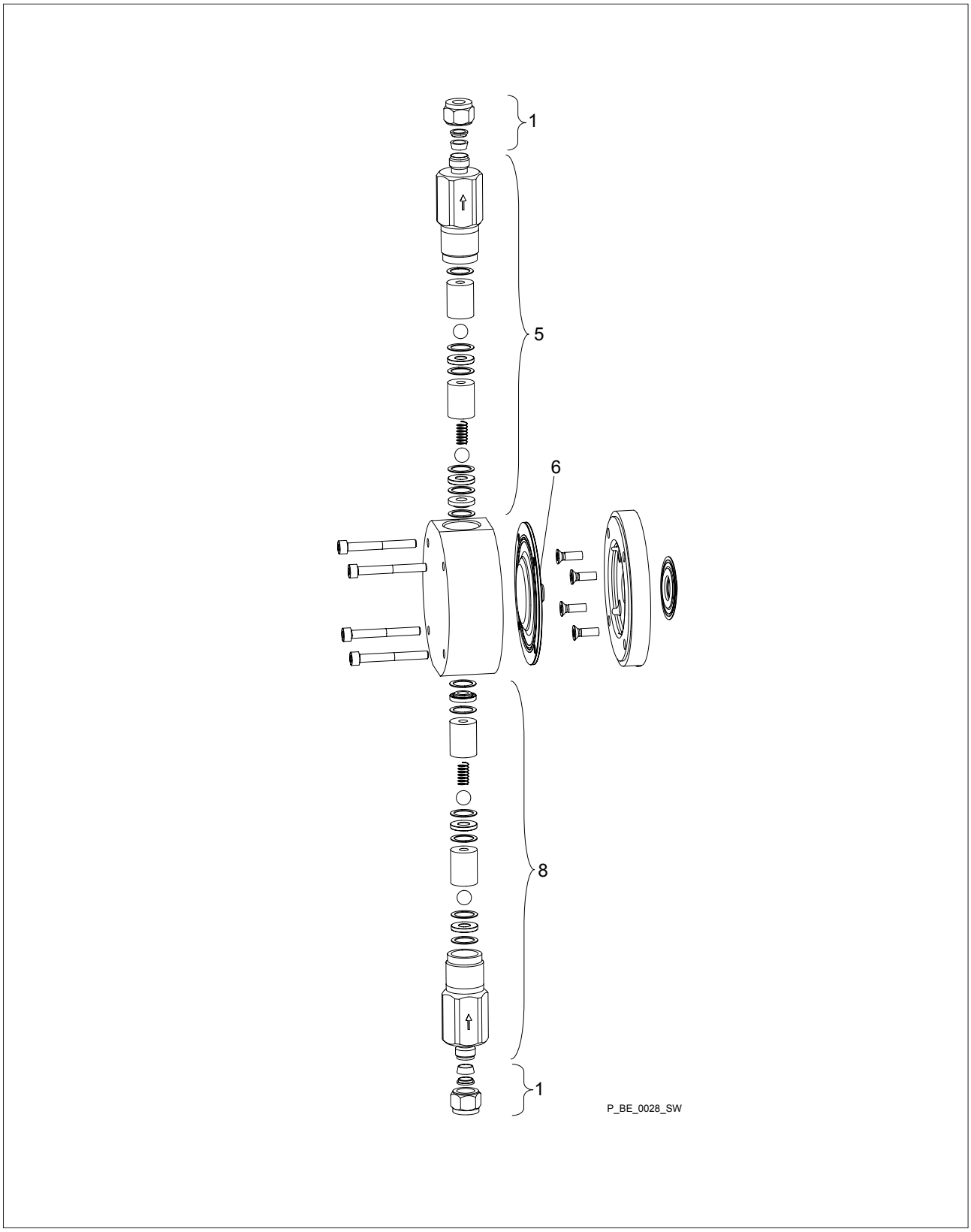

Fig. 47

Tab. 26: Spare parts kit for liquid end Beta b 0232 SS_0

Pos.	Description
1	Connector kit
5	Discharge valve
6	Diaphragm
8	Suction valve

Liquid end Beta b 0232

	SST0
Liquid end	1002344
Spare parts kit	1001736
Diaphragm	1000251

Liquid end Beta b 1602 - 1604 SER, self-bleeding without bypass, NPT7

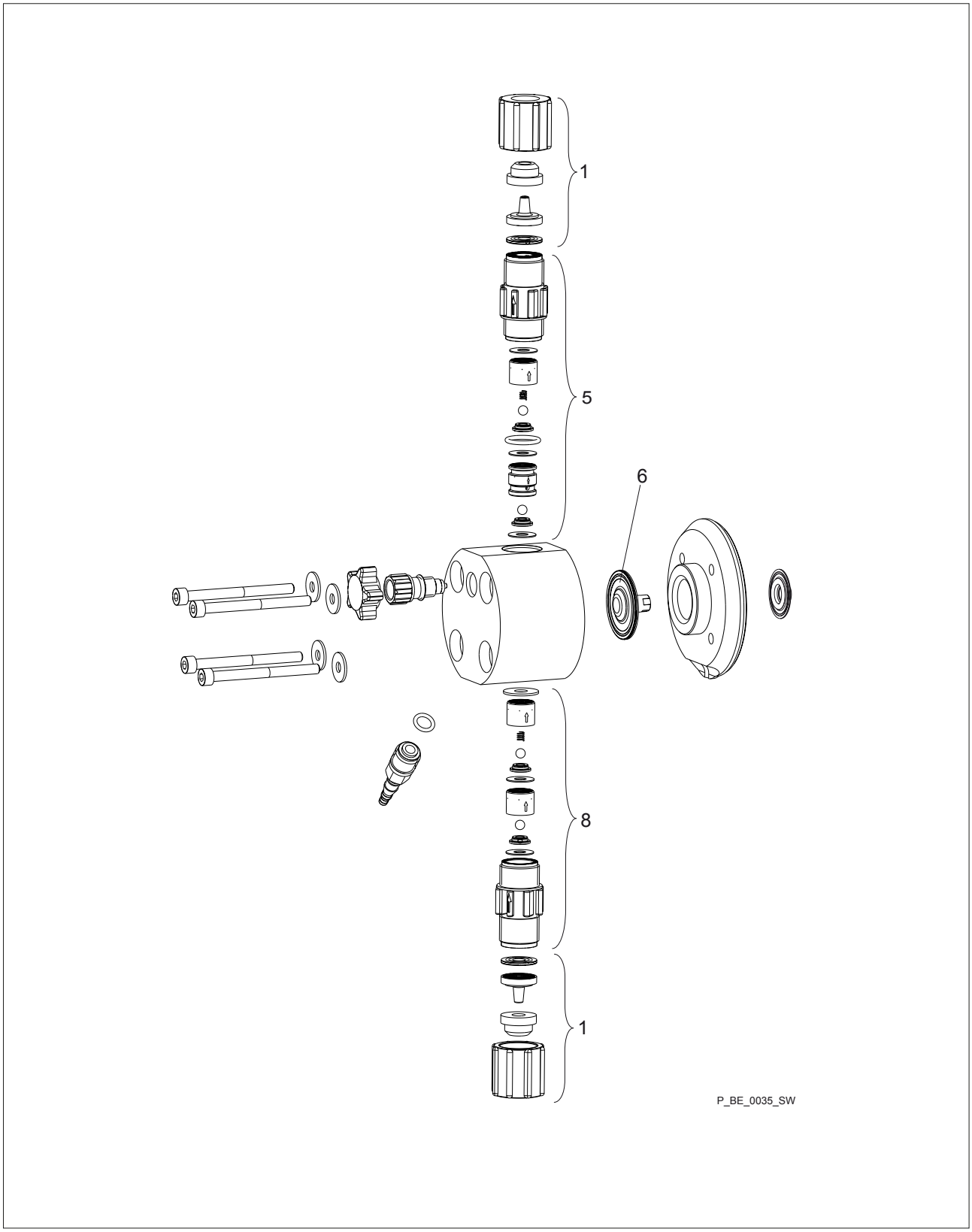

Fig. 48

Tab. 27: Spare parts for liquid end Beta b 1602 - 1604 SER, self-bleeding without bypass, NPT7

Pos.	Description
1	Connector kit
5	Discharge valve
6	Diaphragm
8	Suction valve

Liquid end Beta b 1602

	NPT7
Liquid end SER, self-bleeding without bypass	1075598
Spare parts kit	1047830
Diaphragm	1000246

Liquid end Beta b 1604

	NPT7
Liquid end SER, self-bleeding without bypass	1075599
Spare parts kit	1047858
Diaphragm	1034612

Liquid end Beta b 0708 (1009) - 0220 (0420) SER, self-bleeding without bypass, NPT7

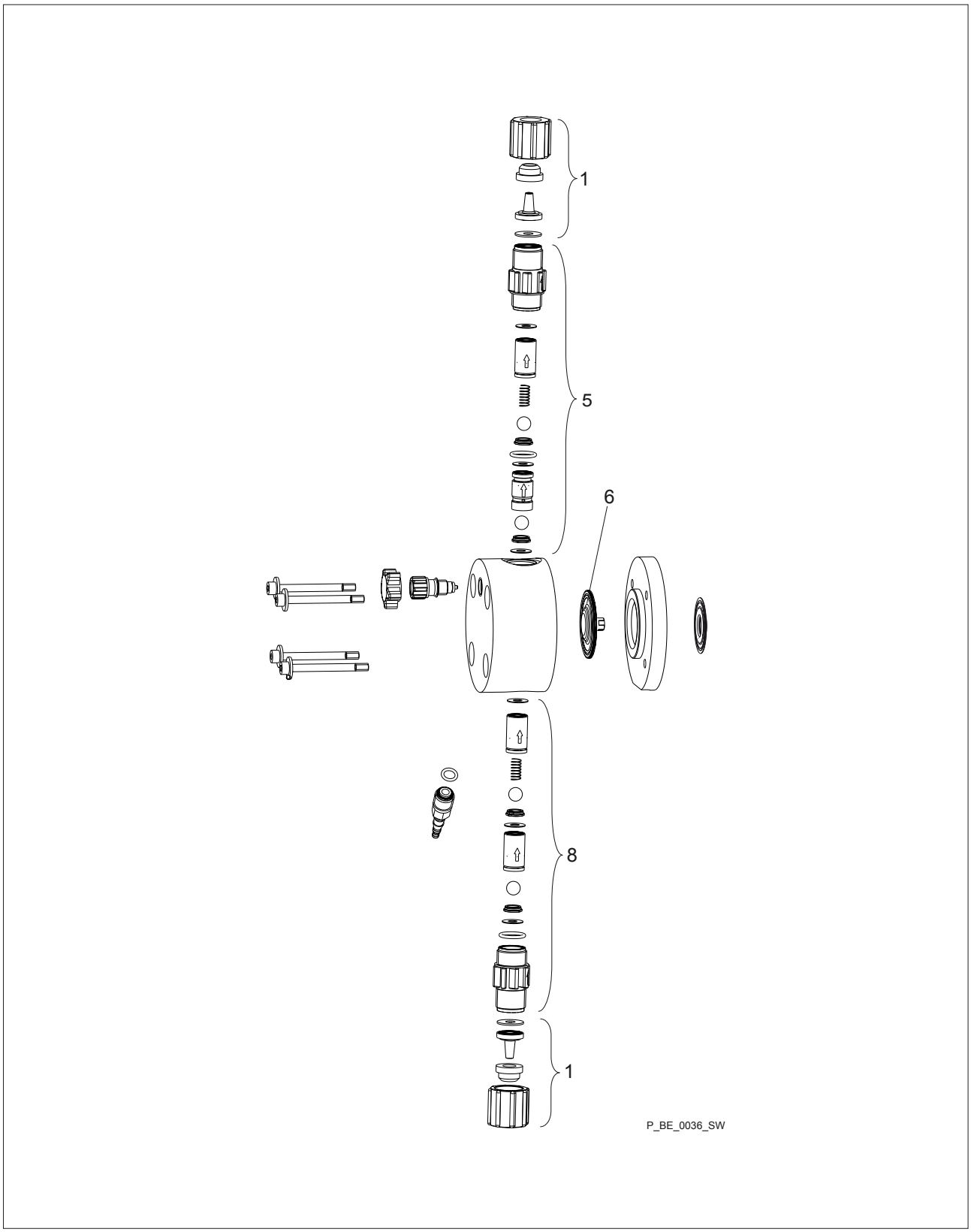

Fig. 49

Tab. 28: Spare parts for liquid end Beta b 0708 (1009) - 0220 (0420) SER, self-bleeding without bypass, NPT7

Pos.	Description
1	Connector kit
5	Discharge valve
6	Diaphragm
8	Suction valve

Liquid end Beta b 0708 (1008)

	NPT7
Liquid end SER, self-bleeding without bypass	1075600
Spare parts kit	1047832
Diaphragm	1000248

Liquid end Beta b 0413 (0713)

	NPT7
Liquid end SER, self-bleeding without bypass	1075601
Spare parts kit	1047833
Diaphragm	1000249

Liquid end Beta b 0220 (0420)

	NPT7
Liquid end SER, self-bleeding without bypass	1075602
Spare parts kit	1047837
Diaphragm	1034650

Liquid end Beta b 1602 - 1604 SER, self-bleeding without bypass, PVT7

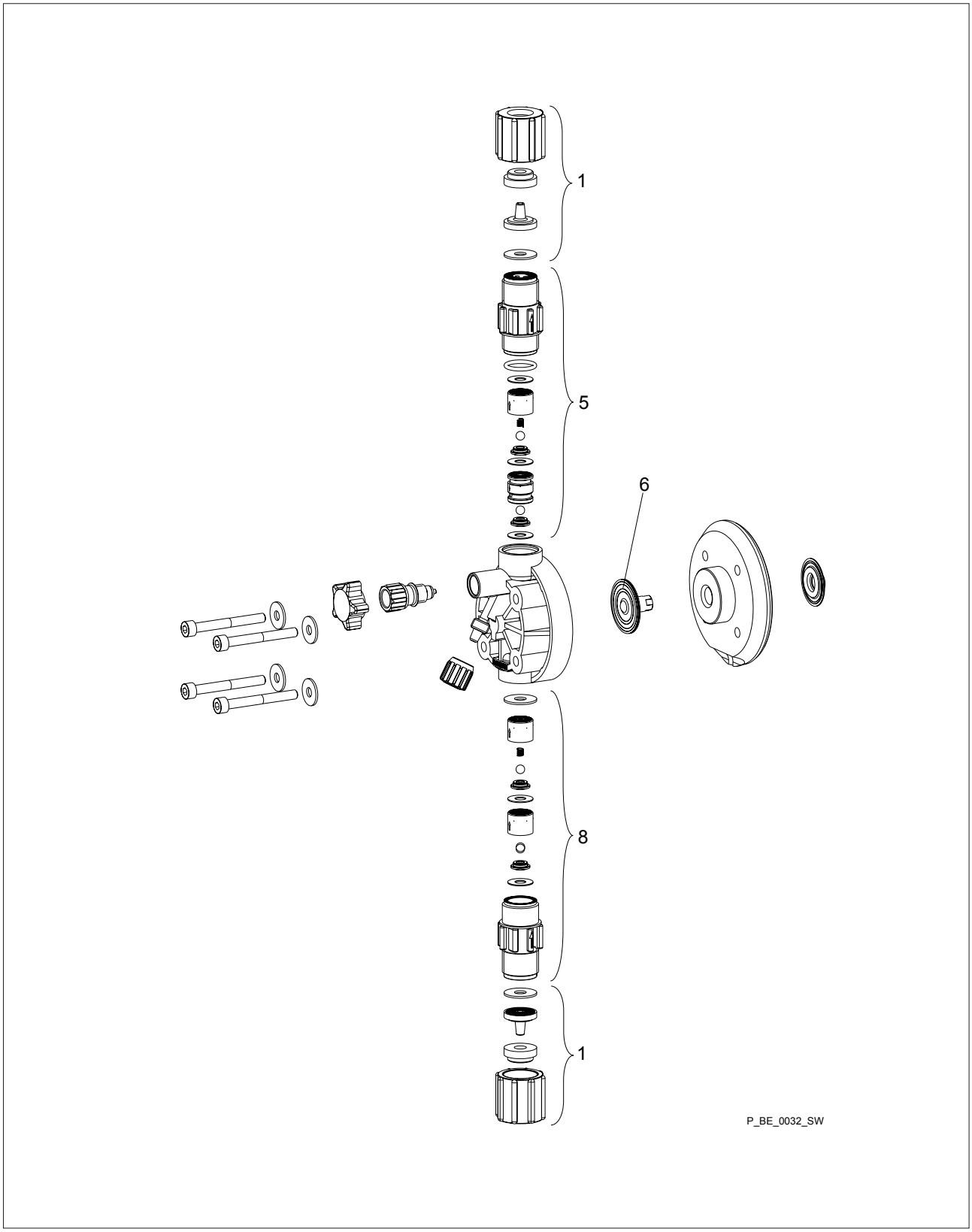

Fig. 50

Tab. 29: Spare parts for liquid end Beta b 1602 - 1604 SER, self-bleeding without bypass, PVT7

Pos.	Description
1	Connector kit
5	Discharge valve
6	Diaphragm
8	Suction valve

Liquid end Beta b 1602

	PVT7
Liquid end SER, self-bleeding without bypass	1048634
Spare parts kit	1047830
Diaphragm	1000246

Liquid end Beta b 1604

	PVT7
Liquid end SER, self-bleeding without bypass,	1048635
Spare parts kit	1047858
Diaphragm	1034612

Liquid end Beta b 0708 (1008) - 0220 (0420) SER, self-bleeding without bypass, PVT7

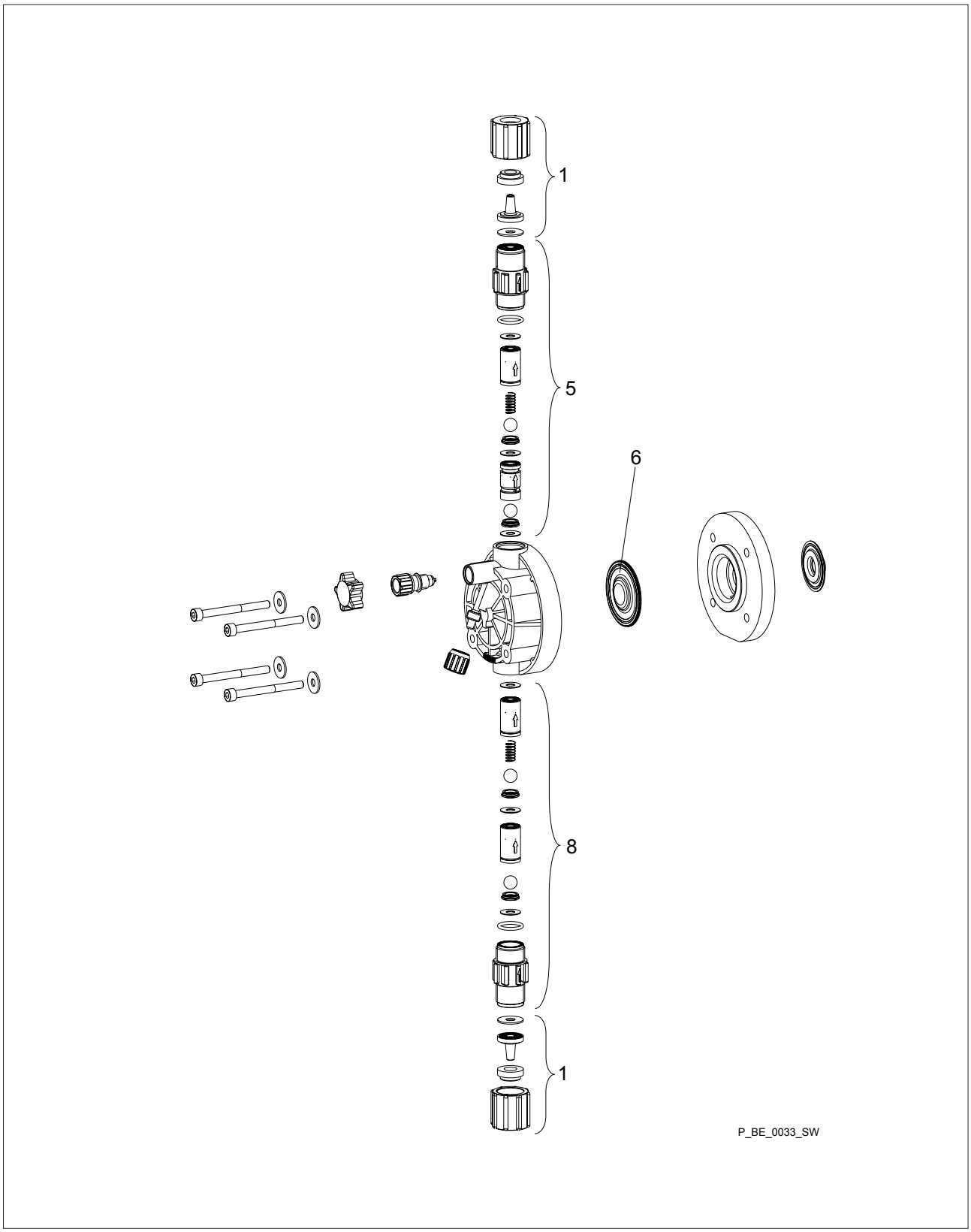

Fig. 51

Tab. 30: Spare parts for liquid end Beta b 0708 (1008) - 0220 (0420) SER, self-bleeding without bypass, PVT7

Pos.	Description
1	Connector kit
5	Discharge valve
6	Diaphragm
8	Suction valve

Liquid end Beta b 0708 (1008)

	PVT7
Liquid end SER, self-bleeding without bypass	1048637
Spare parts kit	1047832
Diaphragm	1000248

Liquid end Beta b 0413 (0713)

	PVT7
Liquid end SER, self-bleeding without bypass	1048638
Spare parts kit	1047833
Diaphragm	1000249

Liquid end Beta b 0220 (0420)

	PVT7
Liquid end SER, self-bleeding without bypass	1048639
Spare parts kit	1047837
Diaphragm	1034650

Liquid end Beta b 1601 - 1604 PP_9 and NP_9

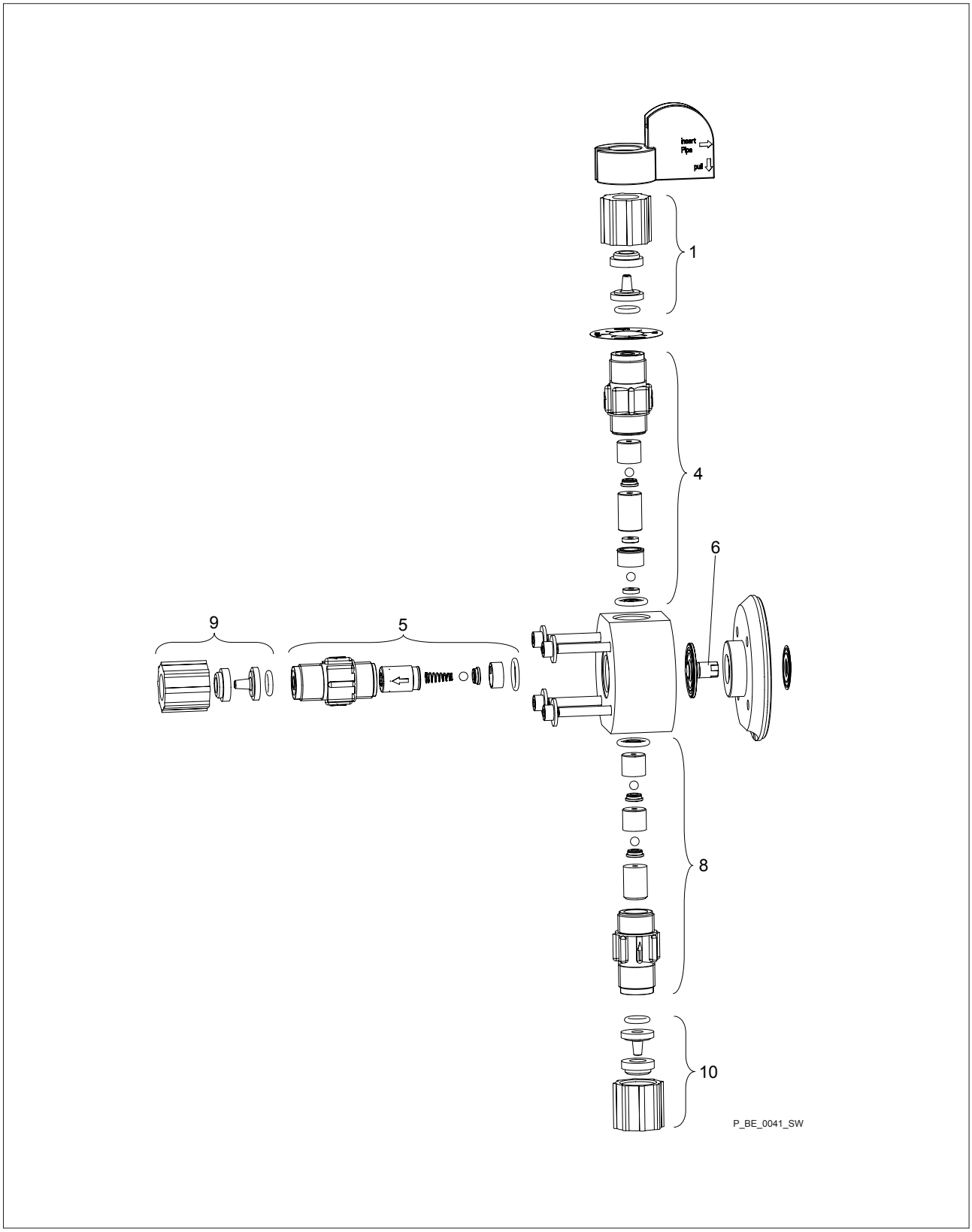

Fig. 52

Pos.	Part
1, 9, 10	Connector kit
4	Bleed valve
5	Discharge valve
6	Diaphragm
8	Suction valve

Tab. 31: Liquid ends

Type	Order no.
PPE9	-
1601	1002393
1602	1002395
1604	1035301
PPB9	-
1601	1002392
1602	1002394
1604	1035302

Tab. 32: Liquid ends

Type	Order no.
NPE9	-
1601	1002248
1602	1002249
1604	1035299
NPB9	-
1601	1002242
1602	1002243
1604	1035300

Spare parts kits for type:	Material version	Order no.
1601	PPE	1001756
1602	PPE	1001757
1604	PPE	1035335
1601	PPB	1001762
1602	PPB	1001763
1604	PPB	1035336
1601	NPE	1001660
1602	NPE	1001661
1604	NPE	1035333
1601	NPB	1001666

Spare parts kits for type:	Material version	Order no.
1602	NPB	1001667
1604	NPB	1035334

Diaphragm for type:	Order no.
1601	1000245
1602	1000246
1604	1034612

Liquid end Beta b 0708 (1008) - 0220
(0420) PP_9 and NP_9

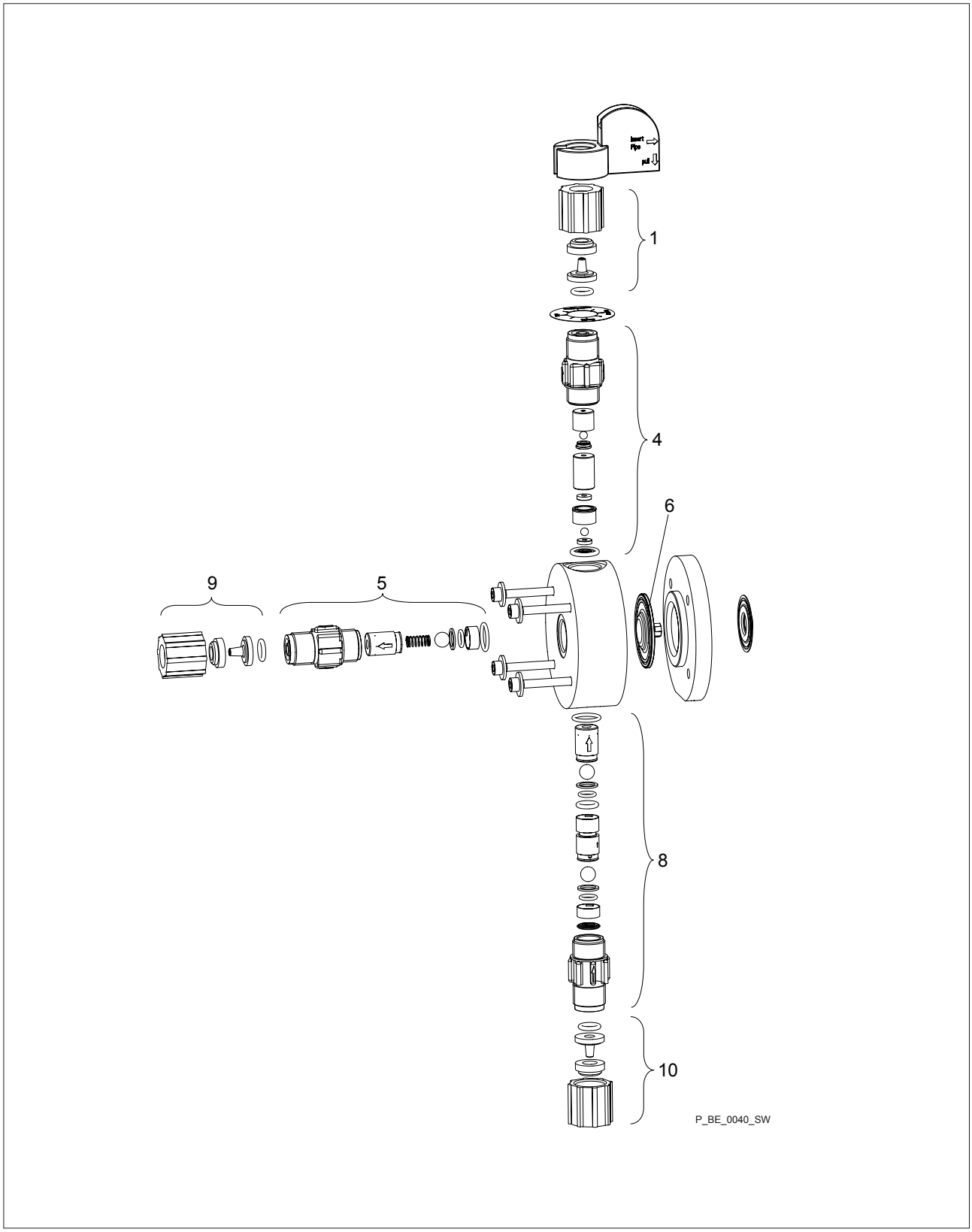

Fig. 53

Pos.	Part
1, 9, 10	Connector kit
4	Bleed valve
5	Discharge valve
6	Diaphragm
8	Suction valve

Tab. 33: Liquid ends

Type	Order no.
PPE9	-
0708 / 1008	1002397
0413 / 0713	1002401
0220 / 0420	1002403
PPB9	-
0708 / 1008	1002396
0413 / 0713	1002400
0220 / 0420	1002402

Tab. 34: Liquid ends

Type	Order no.
NPE9	-
0708 / 1008	1002251
0413 / 0713	1002252
0220 / 0420	1002253
NPB9	-
0708 / 1008	1002245
0413 / 0713	1002246
0220 / 0420	1002247

Spare parts kits for type:	Material version	Order no.
0708 (1008)	PPE	1001759
0413 (0713)	PPE	1001760
0220 (0420)	PPE	1001761
0708 (1008)	PPB	1001765
0413 (0713)	PPB	1001766
0220 (0420)	PPB	1001767
0708 (1008)	NPE	1001663
0413 (0713)	NPE	1001664
0220 (0420)	NPE	1001665
0708 (1008)	NPB	1001669

Spare parts kits for type:	Material version	Order no.
0413 (0713)	NPB	1001670
0220 (0420)	NPB	1001671

Diaphragm for type:	Order no.
0708	1000248
0413	1000249
0220	1000250

19.2 Ordering information

Retrofit kits

Retrofit kit	Order no.
Fault indicating relay for Beta® b:	1029309
Fault indicating/pacing relay for Beta® b:	1029310

Further sources of information

Further information on spare parts, accessories and options can be found in:

- the exploded drawings
- the identity code
- under www.prominent.com
- the ProMinent product catalogue

20 Declaration of Conformity for Machinery, Mains Voltage

In accordance with DIRECTIVE 2006/42/EC OF THE EUROPEAN PARLIAMENT AND OF THE COUNCIL, Appendix I, BASIC HEALTH AND SAFETY REQUIREMENTS, section 1.7.4.2. C.

We,

- ProMinent GmbH
- Im Schuhmachergewann 5 - 11
- D - 69123 Heidelberg, Germany,

hereby declare that the product specified in the following complies with the relevant basic health and safety rules of the EC Directive, on the basis of its functional concept and design and in the version marketed by us. Any modification to the product not approved by us will invalidate this declaration.

Tab. 35: Extract from the Declaration of Conformity

Designation of the product:	Metering pump, product range Beta/4 and Beta/5
Product type:	BT4b _ _ _ _ _ _ _ _ _ _ _ U BT5b _ _ _ _ _ _ _ _ _ _ _ U
Serial number:	see nameplate on the device
Relevant EC directives:	Machinery Directive (2006/42/EC) Compliance with the protection targets of the Low Voltage Directive according to Appendix I, No. 1.5.1 of the Machinery Directive 2006/42/EC RoHS Directive (2011/65/EU) EMC Directive (2014/30/EU)
Harmonised standards applied, in particular:	EN ISO 12100:2010 EN 809:1998 + A1:2009 + AC:2010 EN 61010-1:2010 EN 50581:2012 EN 61000-6-2:2005 + AC:2005 EN 61000-6-3:2011 + A1:2011 + AC:2012
Date:	20.04.2016

You will find the applicable Declaration of Conformity to download on our homepage.

21 Declaration of Conformity for Machinery, Low Voltage

In accordance with DIRECTIVE 2006/42/EC OF THE EUROPEAN PARLIAMENT AND OF THE COUNCIL, Appendix I, BASIC HEALTH AND SAFETY REQUIREMENTS, section 1.7.4.2. C.

We,

- ProMinent GmbH
- Im Schuhmachergewann 5 - 11
- D - 69123 Heidelberg, Germany,

hereby declare that the product specified in the following complies with the relevant basic health and safety rules of the EC Directive, on the basis of its functional concept and design and in the version marketed by us. Any modification to the product not approved by us will invalidate this declaration.

Tab. 36: Extract from the Declaration of Conformity

Designation of the product:	Metering pump, product range Beta/4 and Beta/5
Product type:	BT4b _ _ _ _ _ _ _ _ _ _ _ M BT5b _ _ _ _ _ _ _ _ _ _ _ N
Serial number:	see nameplate on the device
Relevant EC directives:	EC Machinery Directive (2006/42/EC) EU RoHS Directive (2011/65/EU) EC EMC Directive (2014/30/EU)
Harmonised standards applied, in particular:	EN ISO 12100:2010 EN 809:1998 + A1:2009 + AC:2010 EN 61010-1:2010 EN 50581:2012 EN 61000-6-2:2005 + AC:2005 EN 61000-6-3:2007 + A1:2011 + AC:2012
Date:	20.04.2016

You will find the applicable Declaration of Conformity to download on our homepage.

22 Approvals

CE	- see Chapter “Declaration of Conformity”
EAC	It consists of EAC certification with certificate no. TC N RU D-DE.AY14.B. 02691

23 Index

1, 2, 3 ...

"External control" terminal 15, 16, 29, 37, 38
"Level switch" terminal 15, 16

A

About this pump 7
Accuracy 54
Anti-kink device 25
Applied harmonised standards 117, 118
Assembly 19
Auxiliary frequency 16, 30, 31, 38
Auxiliary Frequency 18

B

Backplate 14
Bleed valve 14, 25
Bleeding 23, 24
Bypass hose sleeve 14

C

Capacity 17, 37
Cleaning valves 43
Compatibility 58
Connector size 52
Contacter relay 28
Contacts 38, 39
Control Elements 15
Control type 49

D

Declaration of Conformity 117, 118
Decommissioning 50
Degree of protection 58
Designation of the product 117, 118
Dimensional drawings 59
Discharge valve 14, 25
Disposal 51
Dosing head 14
Draining the liquid end 50

E

Electrical data 55
Electrical installation 27
Emergency 11
Exploded drawings 71
Extern Contact 18, 38
External 39
External analog 15, 16, 31, 39
External contact 15, 16, 30, 31
External frequency changeover 18
External frequency changer 16

F

Fault 18
Fault indicating and pacing relay option 18
Fault indicating relay 18, 32, 33
Fault indicator (red) 15, 16
Fault messages 49
Fault Statuses 18
Functions 15, 16, 18, 37

H

Hierarchy of Operating Modes 18

I

Identification of safety notes 8
Identity code 5
Inductive consumers 28
Information in the event of an emergency 11
Installation, electrical 27
Installation, hydraulic 20
Installing hose lines 21
Intended Use 8
IP 58

L

Leakage hole 40
level 32
Level switch 16, 31, 38

M

mA input 30
mA signal 39
Mains 38
Mains cable 28
Maintenance 40
Manual 15, 17, 18
Manual operation 37
Material specifications 55
Metering pumps with bleed valve 23
Metering pumps with self-bleeding 24
Metering pumps without integral relief valve 25
Metering pumps without self-bleeding 21
Minimum Stroke Length 54
Multifunctional switch 38
Multifunctional Switch 15, 17

O

Operating indicator (green) 15, 16

Operating modes 15, 16, 17
Operating Modes 18
Operation 37
Ordering information 116
Overview of Equipment 14

P

Pacing relay 33
Parallel connection 28
Pause 16, 18, 30, 37
Performance data 52
Power consumption 55
Priming 18, 38
Priming function 15
Priming pressure 24
Protection against contact and humidity 58
Protection class 58
Pulse control switch 15, 39
Pulse Control Switch 38

Q

Qualification of personnel 11

R

Radioactive 13
RC member 28
Relay 18, 32
Relay connection 15
Relevant EC directives 117, 118
Remote operation 37, 39
Repairs 42
Replacing the diaphragm 45
Reproducibility 17, 37, 54
Retrofit kits 116
Return line 25
Return pipe 21, 23, 24

S

Safety Chapter 8
Safety declaration form 13
Safety Requirements 58
Scope of Delivery 13
SEK 24
SEK types 17
Self-Bleeding 17
Semiconductor switch 33
Serial number 117, 118
Shipping weight 58
Sleeve 25
Sound pressure level 12, 58
Standard installation 26
Start up 34
Stop 18, 38
Storage 13
stroke length 17, 37
Stroke Length Adjustment Button 15
Stroke rate 15, 17, 37
Strokes 38, 39
Suction valve 14
Supply voltage 28
Symbols 26

T

Technical data 52
Test (function) 15, 18, 38
Transport 13
Troubleshooting 48

U

Unpacking 13

V

Varistor 28
Viscosity 54

W

Warning indicator (yellow) 15, 16
Warning message 32, 49
Warning sign 8

ProMinent GmbH
Im Schuhmachergewann 5-11
D-69123 Heidelberg, Germany
Telephone: +49 6221 842-0
Fax: +49 6221 842-419
Email: info@prominent.com
Internet: www.prominent.com

986356, 7, en_GB

© 2009